USA 2324-TB

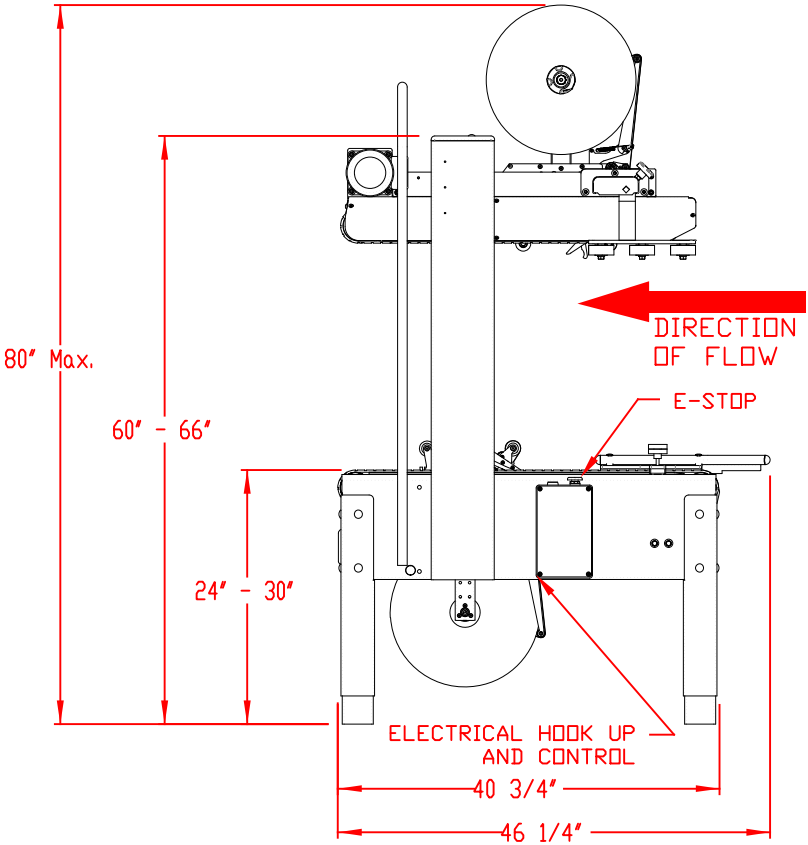
80" Max.
60" - 66"
24" - 30"
DIRECTION
OF FLOW
E-STOP
ELECTRICAL HOOK UP
AND CONTROL
40 3/4"
46 1/4"

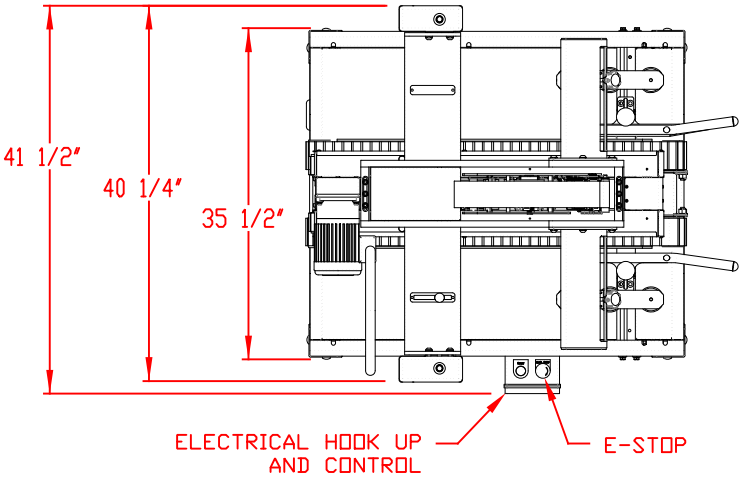
41 1/2"
40 1/4"
35 1/2"
ELECTRICAL HOOK UP
AND CONTROL
E-STOP