BETTER PACKAGES®

USER MANUAL
555E SERIES

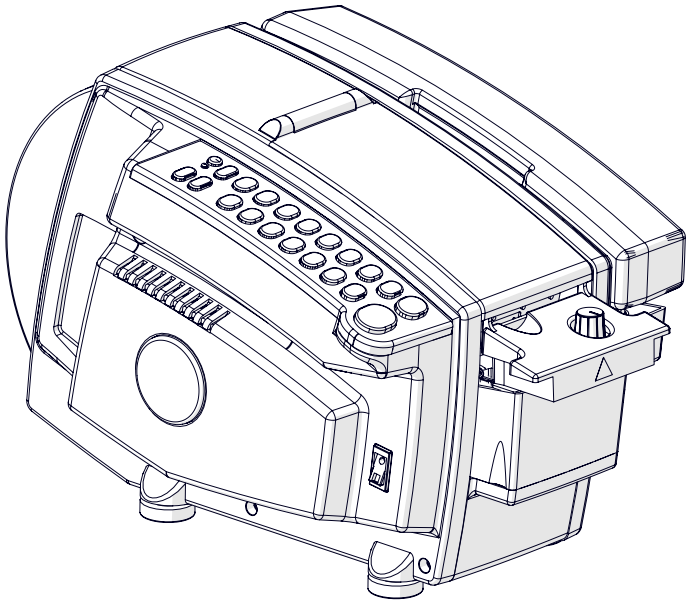

ipg®

BETTER PACKAGES®

REV 3.5 11052026

Original Instructions

This manual was originally written in English. All translations are derived from the English version, which shall be considered the authoritative reference.

User Notes

For all IPG product manuals please visit www.itape.com/systems-manual or use this QR code

Table of Contents

Technical Assistance 4
Replacement Parts 4
Warranty Information 5
Warranty Registration 6
General Information 7
Description of the 555e 7
Definitions 7
Important Safeguards 8
Label Placement 9
Label Descriptions 10
Machine Nameplate 11
Important Safeguards 12
Explanation of Signal Word Consequences 12
Operator Skill Level Descriptions 13
Specifications 14
555e Dimensions 14
555e Components 15
Operating Conditions 16
Tape Requirements 16
Technical Specifications 16
Tape Length 16
Set-up Procedure 17
Unpacking 17
Verifying the Contents 17
Adjusting the Roll Guides 17
Installing the Roll Guides 18
Loading the Tape Gum Side In 19
Loading the Tape Gum Side Out 20
Checking the Upper Tape Plate 21
Installing the Brushes and Water Tank 22
Water Tank Install 23
Water Bottle Install 24
Connecting Power and Utilities 25
Setting and Adjusting Temperature 26
Mount to Work Bench (Optional) 27
Operation 28
General Operating Procedures 28
Selecting the Length of Tape 28
Dispense a Length of Tape Longer Than the Number on the Keypad 29
Dispense a Length of Tape Shorter Than the Number on the Keypad 29
Advanced Adjustment of a Number on the Keypad 29
Programing the Automatic 555e 30
Activate Automatic Mode 30
Programming a Single Length 30
Programming Two Lengths 31
Programming Three Lengths 31
Turning Off Automatic Mode 32
Practical Use of the Automatic Mode 32
Programming an “H” Pattern 32
Applying Tape to a Carton 33
Choosing the Correct Tape Type 33
Choosing the Correct Tape Length 33
Proper Tape Moistening 33
Applying Tape to a Carton 34
Sealing the Carton 34
Preventative Maintenance 35
Suggested Preventative Maintenance Schedule 35
Washing the Tank, Brush, and Bottle 35
Troubleshooting 36
Appendix 37

Technical Assistance

This is the Better Packages Model **555e Series** WAT Tape Dispenser you ordered. It has been set up and tested in our factory with IPG manufactured water activated tapes. If any problems occur when setting up or operating this equipment, please contact the authorized distributor from where you purchased this item.

If contact with the authorized distributor is not possible, **IPG Machinery Support** is available. Should the need to contact **IPG Machinery Support** arise, **please have the equipment model and serial number available prior to contact.** This information can be found on the nameplate of the Dispenser. A section at the bottom of this page is available to write this information down. **IPG Machinery Support** is available during normal business hours (M-F 8am-7pm) Eastern Time.

Phone: +1 813-345-3070 Email: machsupp@itape.com

Replacement Parts

A breakdown of parts, including part numbers, can be provided upon request. If you know the part number that you require please contact your authorized distributor or Better Packages Customer Service 1-203-926-3700 or 1-800-237-9151 (United States only), parts can also be found directly at www.betterpackages.com/parts

Please use this area to enter the detailed information on your dispenser. This should be filled out at the time of install. This information can be found on the nameplate of the machine, next to the main power plug on the back of the dispenser.

Machine

Model

Serial

Distributor

Name

Phone/Email

Date of Purchase

Warranty Information

Better Packages® Products by Intertape Polymer Corp – Limited Warranty

Intertape Polymer Corp warrants each new Better Packages® product to be free from defects in materials and workmanship under normal and proper use conditions. The following warranty periods from date of purchase apply:

Model	Parts	Labor
Better Pack 755e Series	2 Years	6 Months
Better Pack 555e Series	2 Years	6 Months
Better Pack 500 Series	2 Years	6 Months
Better Pack 333 Series	2 Years	6 Months
Curby Mini Taper (BP222)	1 Year	6 Months
Packer 3S	2 Years	6 Months
Tape Shooter 404	2 Years	6 Months
Auto H2O Series	1 Year	6 Months

Wearable parts such as shear blades, water brushes, motor brushes, side guide plates and upper tape guide plates are not covered under the warranty. The following wearable parts are warranted for 3 months from date of purchase:

1. Main Board
2. Solenoid
3. Main Motor

Warranty Conditions and Exclusions

Machines and accessories used for any improper or unintended purpose will not be considered for warranty protection. Any modification of the machines or accessories shall make this warranty null and void. Use of replacement parts other than approved Better Packages® products shall also make this warranty null and void.

Intertape Polymer Corp shall have no obligation to repair or replace (1) those parts failing due to operator misuse, carelessness, or due to any accidental cause other than equipment failure, or (2) parts that fail due to:

1. Misapplication, lack of proper maintenance, abuse, improper installation, or abnormal conditions such as temperature, moisture, dirt, or corrosive matter, etc.
2. Inadequate cleaning, improper operating environment, improper utilities, or operator error.
3. Operations beyond the rated capacity of the product.
4. Alteration or servicing of the product by anyone other than an authorized representative of Intertape Polymer Corp
5. Any attempt by the purchaser to repair or correct alleged defective equipment. In this event the purchaser is responsible for all expenses incurred.

IN NO EVENT SHALL INTERTAPE POLYMER CORP. BE LIABLE FOR ANY INDIRECT, INCIDENTAL OR CONSEQUENTIAL DAMAGE FROM THE SALE OR USE OF THESE PRODUCTS. THIS DISCLAIMER APPLIES BOTH DURING AND AFTER THE TERM OF WARRANTY.

THIS WARRANTY IS EXPRESSLY IN LIEU OF ALL OTHER WARRANTIES, EXPRESS OR IMPLIED, INCLUDING THE WARRANTIES OF MERCHANTABILITY AND FITNESS FOR A PARTICULAR PURPOSE (EXCEPT AS MAY BE OTHERWISE PROVIDED BY LAW).

This warranty gives you specific legal rights, and you may also have other rights, which vary, from state to state.

Warranty Information

Warranty Service

Intertape Polymer Corp will replace or repair (at the company's discretion) any defective parts within the warranty period, on a non-charge basis. The Authorized Distributor/Service Center will furnish, without charge, necessary labor to service the machine.

For service under this warranty, call or write Intertape Polymer Corp Distributor/Service Center Ansonia, CT at 800-237-9151 (US only) or (203) 926-3700. To locate your local Authorized Distributor/Service Center, visit www.betterpackages.com.

If customer wishes, with authorization from Intertape Polymer Corp or an Authorized Distributor/Service Center, a product may be shipped to Intertape Polymer Corp Ansonia, CT for warranty service. Any item shipped for warranty service must be shipped in the original factory carton and properly packed with the original protective packaging inserts or a secure carton that will properly protect the unit during transit. Any damage to machines or parts received improperly packed are the responsibility of the customer. All associated shipping or freight costs related to items shipped for service are the sole responsibility of the customer. Transportation charges on machines or parts returned to Intertape Polymer Corp Ansonia, CT for service must be prepaid by the customer. Customers will be responsible for freight expenses on parts or machines returned to them.

Intertape Polymer Corp - 4 Hershey Drive, Ansonia, Connecticut 06401.

Warranty Registration

Filling out the warranty card and returning it to us protects your warranty and allows us to keep you informed of product upgrades. Visit www.betterpackages.com/warranty-registration to fill out the warranty card online.

General Information

Description of the 555e

The Better Packages 555e Series is water-activated tape dispenser (also known as a paper tape dispenser, gummed, or gum tape water-activated tape dispenser) and comes standard with a large capacity tape basket. The 555e series is designed for high volume shipping and packaging areas. This allows for up to a 1,000 ft. long or 10” diameter roll of tape (305 meter long or 254mm diameter roll).

The 555e is equipped with a heater unit, water tank, and high capacity water bottle, 64oz (1.89 liter).

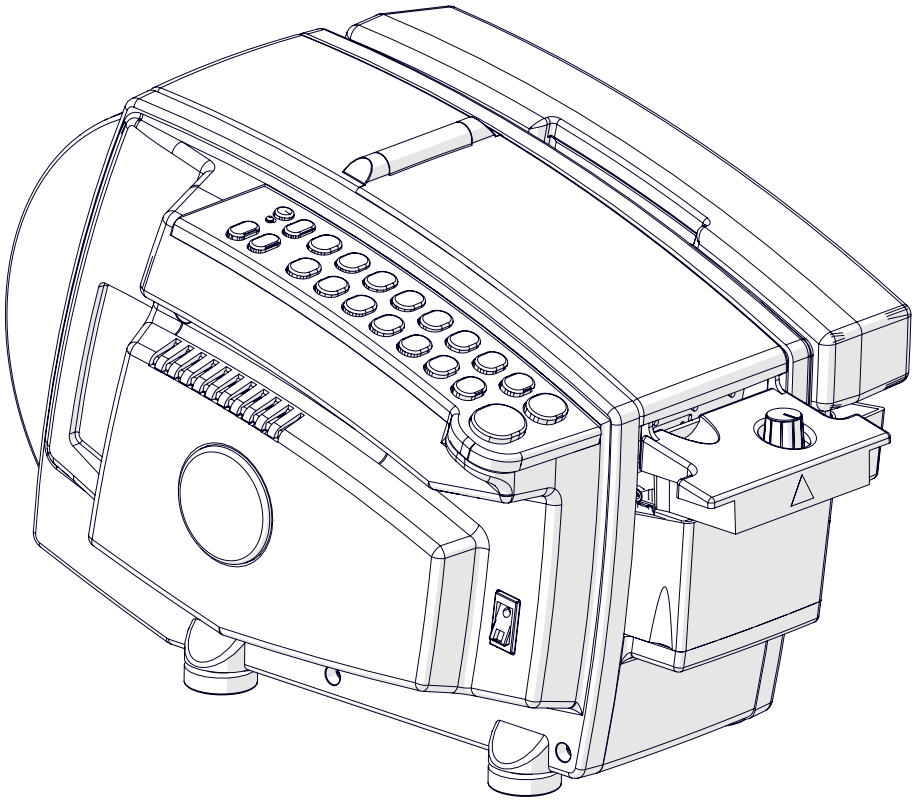

Figure 1: Better Packages 555e

Definitions

Common terms that will be used throughout this manual.

WAT – IPG Brand Water Activated Tape

User/Operator – The individual who has been trained on the daily use of the Machine System

Maintenance Champion – The individual(s) who work for the end user of the Machine System who are responsible for conducting general and preventative maintenance

Important Safeguards

There are a number of safety labels used on the 555e. These labels are placed at different locations on the dispenser to warn operators and service personnel of possible dangers. Please read the labels on the machine and the following safety precautions before using the machine.

Read this manual for other important safety operating and service information.

Only trained personnel are to operate machine.

Only fully qualified technicians are to service this machine.

Wear safety glasses when performing maintenance.

Allow time to cool before working on the heaters.

Disconnect electrical power before servicing.

Follow Lock Out / Tag Out Procedures BEFORE servicing any machinery.

All factory installed covers and guards must be in place before operating.

Stay clear of moving parts which can shear and cut.

Should any of the safety labels on the dispenser be damaged or destroyed, replacements can be ordered through your distributor.

Label Placement

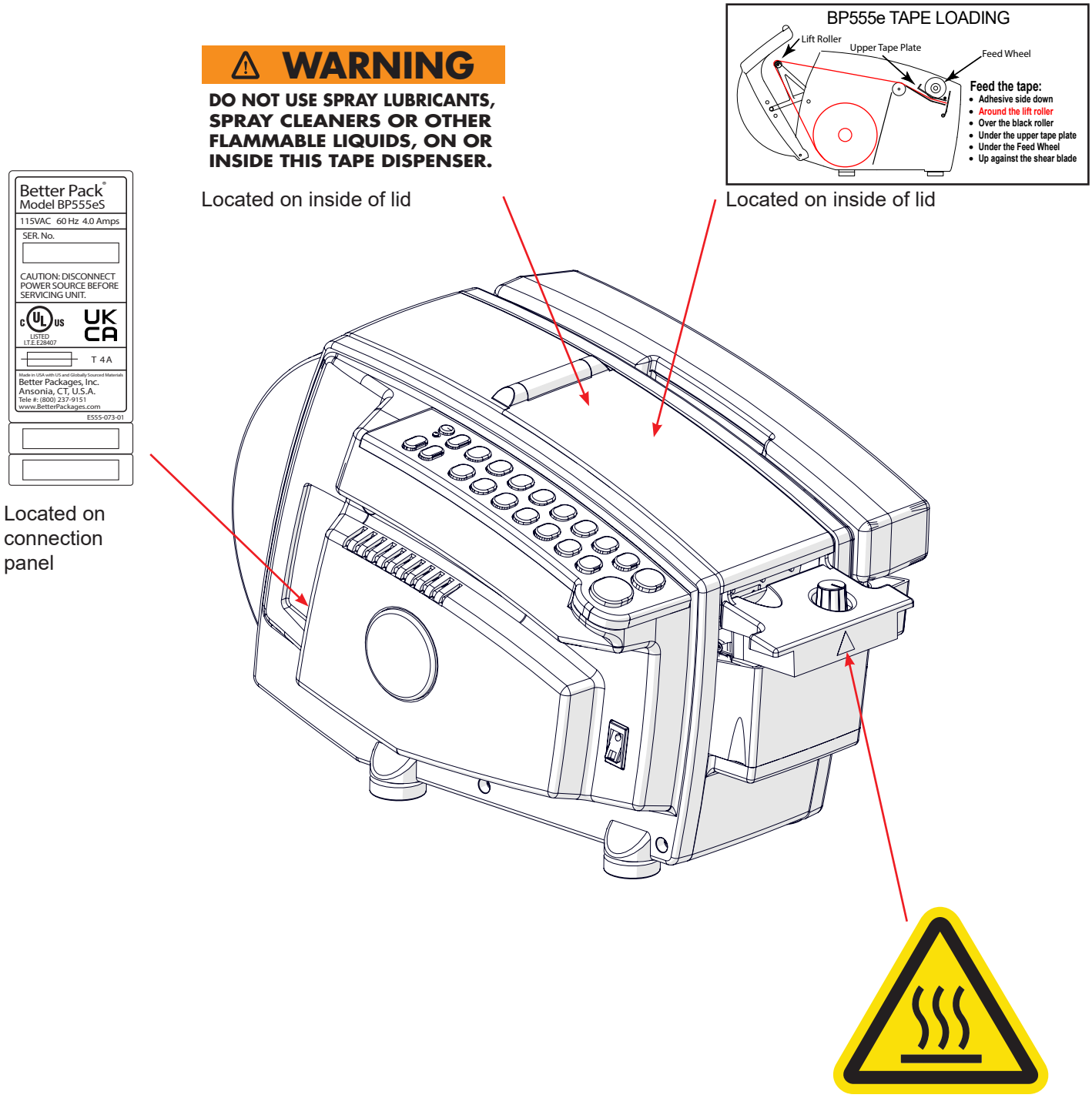

Figure 2: Label Placement

Label Descriptions

The label shown is affixed to the heaters.

It warns operators and service personnel to keep their hands clear of hot elements. Allow time to cool, minimum of 30 minutes, prior to servicing.

Reorder number: 9004150



Figure 3: Hot Decal

The label shown is affixed to the inside of the lid.

It warns operators and service personnel to not use specific cleaners or lubricants.

Reorder number: 9002810



Figure 4: Warning Hazard Decal

The label shown is affixed to the inside of the lid.

It displays the proper tape path and loading procedure.

Reorder number (Gum Side In): 9004380

Reorder number (Gum Side Out): 9004800

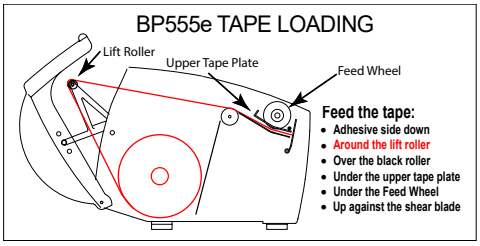

Figure 5: Tape Loading Decal (Gum Side In)

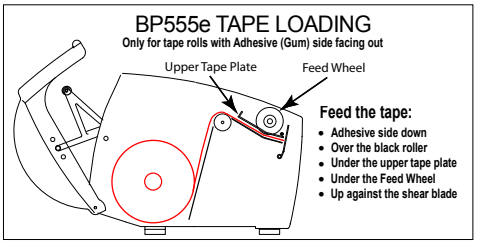

Figure 6: Tape Loading Decal (Gum Side Out)

The label shown is affixed to the connection panel on the back of the dispenser.

It is the model and serial label. This will display model, power requirements, serial number, certifications, fuse rating, and manufacturer details.

Reorder number: Please contact Better Packages Customer Service for the correct replacement for your machine as there are different models.

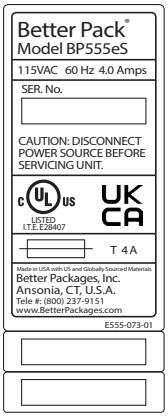

Figure 7: Machine Nameplate

Should any of the safety labels on the Case Sealer be damaged or destroyed, replacements can be ordered through your distributor.

Machine Nameplate

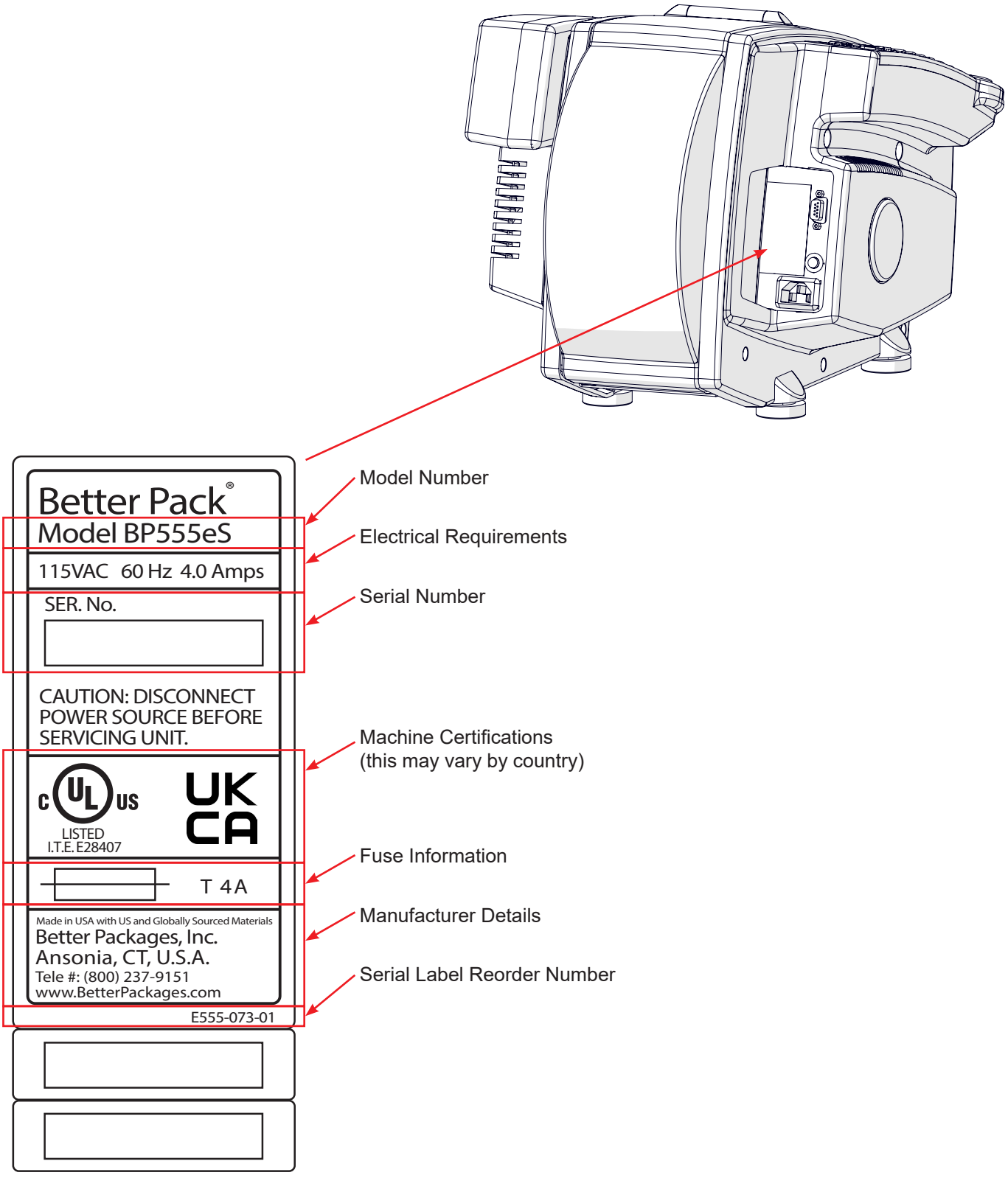

Figure 8: Machine Nameplate

Important Safeguards

Explanation of Signal Word Consequences



WARNING: INDICATES A POTENTIALLY HAZARDOUS SITUATION, WHICH IF NOT AVOIDED COULD RESULT IN DEATH OR SERIOUS INJURY OR PROPERTY DAMAGE



CAUTION: INDICATES A POTENTIALLY HAZARDOUS SITUATION, WHICH IF NOT AVOIDED COULD RESULT IN MINOR OR MODERATE INJURY OR PROPERTY DAMAGE



WARNING

1. **To reduce the risk associated with mechanical, pneumatic, and electrical hazards:**
   - Read, understand, and follow all safety and operating instructions before operating or servicing the Dispenser
   - Allow only properly trained and qualified personnel to operate and service this equipment
2. **To reduce the risk associated with pinches, entanglement, and hazardous voltage:**
   - Turn electrical supply off and disconnect before performing any adjustments, maintenance, or servicing the Dispenser
3. **To reduce the risk associated with pinches and entanglement hazards:**
   - Turn the Dispenser off when not in use
   - Never attempt to work on any part of the Dispenser, load tape, or remove jammed tape from the Dispenser while the machine is powered on
4. **To reduce the risk associated with hazardous voltage**
   - Position electrical cord away from foot traffic and vehicle traffic
   - Do not operate the Dispenser with a damaged power cord
5. **To reduce the risk associated with sharp blades hazards:**
   - Keep hand and fingers away from the tape cutoff blades, the blades are very sharp
6. **To reduce the risk associated with fire and explosion hazards:**
   - Do not operate this equipment in potentially flammable and/or explosive environments
7. **To reduce the risk associated with muscle strain:**
   - Use proper body mechanics when moving or lifting the Dispenser
8. **To reduce the risk associated with mechanical, pneumatic, and electrical hazards:**
   - Allow only properly trained and qualified personnel to operate and service this equipment
9. **Personal Protective Equipment (PPE)**
   - Follow all PPE protocols specific to the facility where the dispenser is installed.



CAUTION

1. **To reduce the risk associated with pinch hazards:**
   - Keep hands, hair, loose clothing, and jewelry away from internal components



CAUTION: TO AVOID INJURY THE MACHINE OPERATOR SHOULD REMAIN ATTENTIVE AND SHOULD NEVER REST THEIR HANDS, ARMS, HEAD, OR ANY OTHER BODY PART ON THE MACHINE.

This equipment is not suitable for use in locations where children are likely to be present.

IPG manufactured WAT is nonhazardous with no need for first aid measures under recommended/normal use conditions. WAT adhesive can be cleaned with soap and water.

Important Safeguards

Installation Requirements

When the 555 is being installed into facilities and pack stations the integrator and/or customer must:

- Verify the dispenser on a stable, level work surface capable of supporting the dispenser during normal operation. The N555e weighs approximately 24 lb (10.9 kg) without a tape roll.
- Verify adequate space for the dispenser, which measures approximately 20.2 × 12.5 × 12.2 in. (512 × 316 × 307 mm).
- Verify the dispenser is installed indoors in a dry, relatively clean environment between 40°F and 105°F (5°C to 40°C). Relative humidity must not exceed 90% at 68°F (20°C).
- Verify the dispenser is connected to a properly grounded electrical outlet installed in accordance with applicable local codes and ordinances. Use the power cord supplied with the dispenser.
- Verify that the electrical supply matches the voltage and frequency shown on the dispenser nameplate.
- Verify the dispenser is positioned so the power cord is protected from foot and vehicle traffic and is not subject to damage.

Intended Use

1. The Better Packages 555e Series water-activated tape dispenser is designed and intended exclusively for the dispensing, cutting, and moistening of compatible water-activated tape for use in sealing corrugated cartons and similar packaging.
2. The equipment is intended for use by trained personnel in commercial and industrial packaging environments and shall be installed, operated, and maintained in accordance with the instructions and limitations specified in this manual.
3. Any use outside the specified application, operating conditions, or equipment limitations is considered outside the intended use of the dispenser.

Forseeable Misuse

The following application or acts are not suitable for the tape head and constitute improper use.

1. Do not operate the dispenser without proper training.
2. Do not use the dispenser for purposes other than dispensing, cutting, and moistening water-activated tape.
3. Do not use tape types, widths, or roll sizes that are not specified for use with the dispenser.
4. Do not operate the dispenser with covers, guards, or safety-related components removed or improperly installed.
5. Do not bypass, disable, modify, or defeat any safety device or protective feature.
6. Do not reach into the tape path, feed mechanism, or cutting area while the dispenser is powered.
7. Do not clear jammed tape while the dispenser is powered.
8. Do not load, adjust, clean, maintain, or service the dispenser without following the required shutdown procedures.
9. Do not place hands or fingers near the cutting blade or moving components.
10. Do not touch the heater or surrounding components while hot.
11. Do not operate the dispenser with a damaged power cord, plug, or electrical connection.
12. Do not connect the dispenser to a power supply that does not match the electrical rating on the machine nameplate.
13. Do not connect the dispenser to an ungrounded or improperly grounded electrical outlet.
14. Do not operate the dispenser in wet conditions or expose electrical components to water or other liquids.
15. Do not operate the dispenser in a flammable or explosive environment.
16. Do not use flammable cleaners, spray lubricants, or other unsuitable substances on or inside the dispenser.
17. Do not use the dispenser as a work surface, shelf, step, seat, or support.
18. Do not place tools, objects, or materials inside the dispenser that are not required for its intended operation.
19. Do not move or lift the dispenser by the lid, water bottle, heater, or other components not intended as lifting points.
20. Do not operate the dispenser on an unstable or unsuitable work surface.
21. Do not modify the dispenser or install unauthorized components or accessories that could affect safe operation.
22. Do not allow children or untrained personnel to operate the dispenser.

Important Safeguards

Disclaimer

The Better Packages 555e Series is intended to dispense, cut, and moisten water-activated tape for the manual sealing of corrugated cartons and similar packaging applications.

IPG and its authorized representatives are not responsible for accidents, injuries, equipment damage, or other damages resulting from:

1. Failure to follow the instructions, warnings, and safety information provided in this manual.
2. Use of the dispenser for any purpose other than its intended use.
3. Use of components, accessories, replacement parts, or adapters not supplied or approved by IPG or an authorized representative.
4. Repairs, adjustments, or modifications performed by anyone other than an IPG Authorized representative or qualified service technician, where authorization is required.
5. Unauthorized modification or alteration of the dispenser, its components, safety devices, or electrical systems.
6. Removal, bypassing, disabling, or modification of guards, covers, interlocks, or other safety-related components.
7. Operation outside the environmental, electrical, or operating conditions specified in this manual.
8. Improper installation, operation, maintenance, or servicing of the dispenser.
9. Failure to disconnect the dispenser from electrical power when required for maintenance or servicing.

Long Term Storage

It is recommended to keep the original carton and shipping materials for proper long term storage.

Storage Conditions:

1. Store the dispenser indoors in a clean, dry environment.
2. Disconnect the dispenser from the electrical supply.
3. Remove all water-activated tape from the dispenser.
4. Completely drain the water bottle and water tank.
5. Clean and thoroughly dry the water bottle, water tank, and brushes before storage.
6. Allow the dispenser to cool completely before packing or covering.
7. Protect the dispenser from moisture, condensation, dust, corrosive materials, direct sunlight, and extreme temperatures.
8. Store the dispenser in an upright position on a stable surface.
9. When possible, store the dispenser in its original packaging or cover it to prevent dust and debris accumulation.
10. Before returning the dispenser to service, inspect it for damage, moisture, corrosion, or deterioration resulting from storage.

Important Safeguards

Operator Skill Level Descriptions

These descriptions and levels are uniform across all Better Packages WAT Dispensers

Skill “A” Dispenser Operator

This operator is trained to use the Dispenser with the machine controls, to change tape, and to clear jams and perform basic troubleshooting.

Important: *The end user area supervisor must ensure that the operator has been properly trained on all machine functions before operating the machine.*

Skill “B” Mechanical Maintenance Technician

Also referred to as the Maintenance Champion, this technician, is trained to use the Dispenser as the Operator and to check and adjust mechanical components, to perform maintenance operations and repair the Dispenser. A skill “B” operator is not allowed to work on live electrical components.

Skill “C” Factory Trained Technician

A Skill “C” technician is trained by IPG and may perform extraordinary maintenance. This includes electrical components.

Operators skill level required to perform the following tasks on the 555e

OPERATION	MACHINE CONDITION	OPERATOR SKILL LEVEL	NUMBER OF OPERATORS
Tape Roll Replacement	Powered Off	A	1
Feed Wheel Adjustment	Powered Off	A	1
Blade Replacement	Electrical Power Disconnected	B	1
Ordinary Maintenance and Preventative Maintenance	Electrical Power Disconnected	B	1

Better Packages offers a mail in factory maintenance program. Contact your Authorized IPG Representative for more information.

Specifications

555e Dimensions

Dispenser Weight (without tape roll):
29 lbs (13.2kg)

Shipping Weight:
32 lbs (14.5kg)

Maximum tape roll diameter: 10in (254mm)
Maximum tape roll length: Up to 1000ft (304.8m)

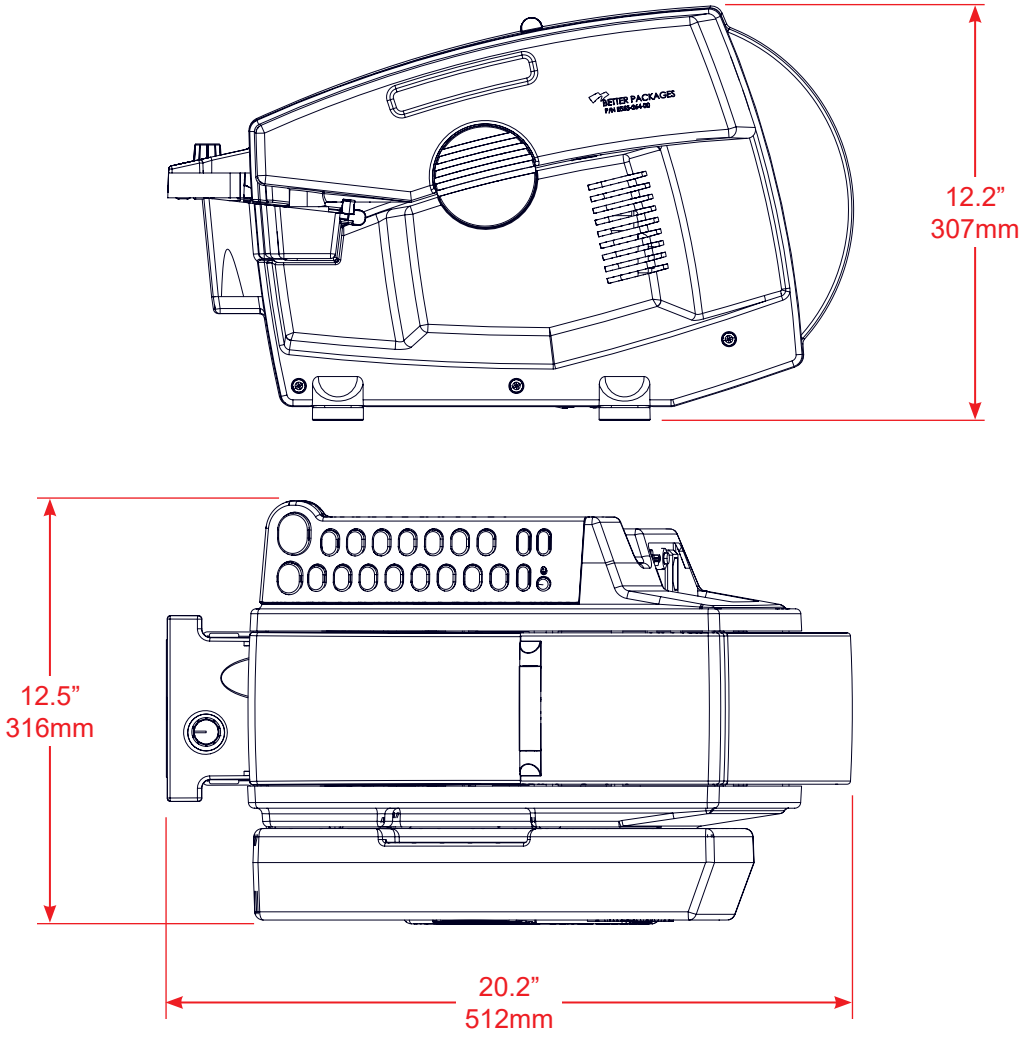

Figure 9: Dispenser Dimensions

555e Components

Lid shown in open position.

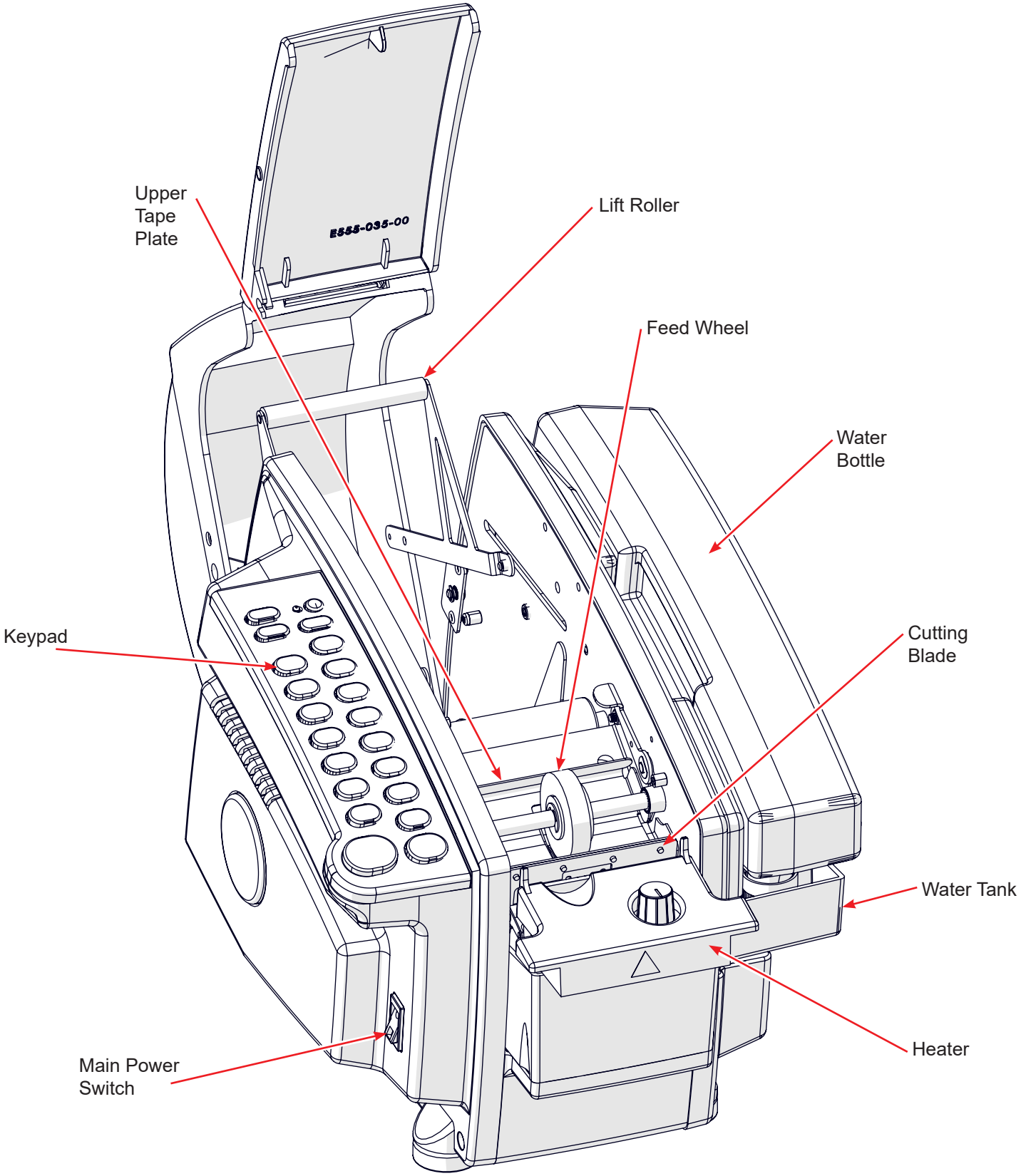

Figure 10: 555e Components

Specifications

Operating Conditions

Use in a dry, relatively clean environment at 40º to 105º F (5º to 40º C). Humidity not to exceed 90% at a temperature of 68º F (20º C). The 555e will be capable of operating correctly at altitudes up to 10,000 ft. (3,000 m) above sea level.

Tape Requirements

Use only IPG Brand Water Activated Tape.

Maximum tape roll diameter of 10” (254mm) with a maximum tape roll length of 1000ft (304.8m).

Technical Specifications

Dispensing Speed: 45 inches (114cm) per second.

Water Bottle Capacity: 64oz (1.8 liter)

Power Requirements:

Always connect the 555e to a properly grounded outlet, that has been installed in accordance to all local codes and ordinances, using a power cord that has been provided by Better Packages.

North America (US/Canada)		
Model	Length/Unit of Measure	Power Requirements
BP555eS	Inches	115V 60Hz, 4A
BP555eL	Inches (long)	115V 60Hz, 4A
BP555eSA	Inches	115V 60Hz, 4A

Europe		
Model	Length/Unit of Measure	Power Requirements
BP555eM*	Metric	230V 50Hz, 2A
BP555eMA*	Metric	230V 50Hz, 2A

Japan		
Model	Length/Unit of Measure	Power Requirements
BP555eJ	Metric	100V 50/60Hz, 4A
BP555eJA	Metric	100V 50/60Hz, 4A

Asia		
Model	Length/Unit of Measure	Power Requirements
BP555eFA**	Inches	230V 50Hz, 2A
BP555eFACM**	Metric	230V 50Hz, 2A

* eM and eMA models use gum side out tape.
**eFA and eFACM models use gum side in tape.

Tape Length

The 555e comes standard to be able to dispense tape lengths from 6in to 45in (eS, eSA, and eFA), 12in to 90in (eL), 15cm to 145cm (eM, eMA, eJ, eJA, and eFACM) there is a standard tolerance of +/- ½” (6mm).

Set-up Procedure

Unpacking

After opening all the top flaps on the carton, you will find instructions for properly removing the dispenser and its included materials. It is recommended to keep all packing materials in case you need to ship the dispenser later or wish to pack and store it.

Verifying the Contents

Once the dispenser has been removed from the carton verify it has been shipped with all of the following items.

- Wetting Brush Qty 1 Part Number: E55513201
- Water Tank Qty 1 Part Number: E55503301
- Water Bottle Qty 1 Part Number: E55526401
- Upper Tape Plate Qty 1 Part Number: E55501800
- Tape Roll Guides Qty 2 Part Number: E55506400
- Power Cord Qty 1
- User Manual Qty 1

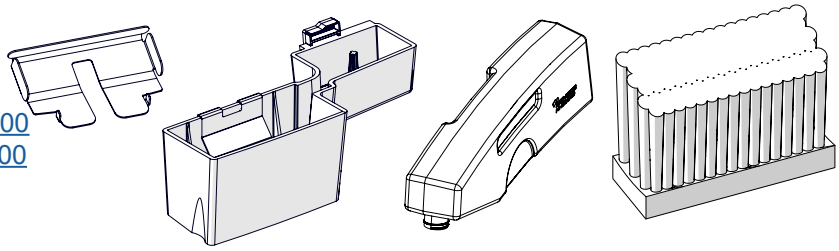

The power cord included will be for the region/country your unit is sold into.

Figure 11: Included Components

Adjusting the Roll Guides

Roll guides fit into the slots in the front and bottom panels of the tape basket. They hold the tape roll vertical and centered on the feed wheel. These are adjusted for the width of the tape being used. The 555e has two (2) roll guides.

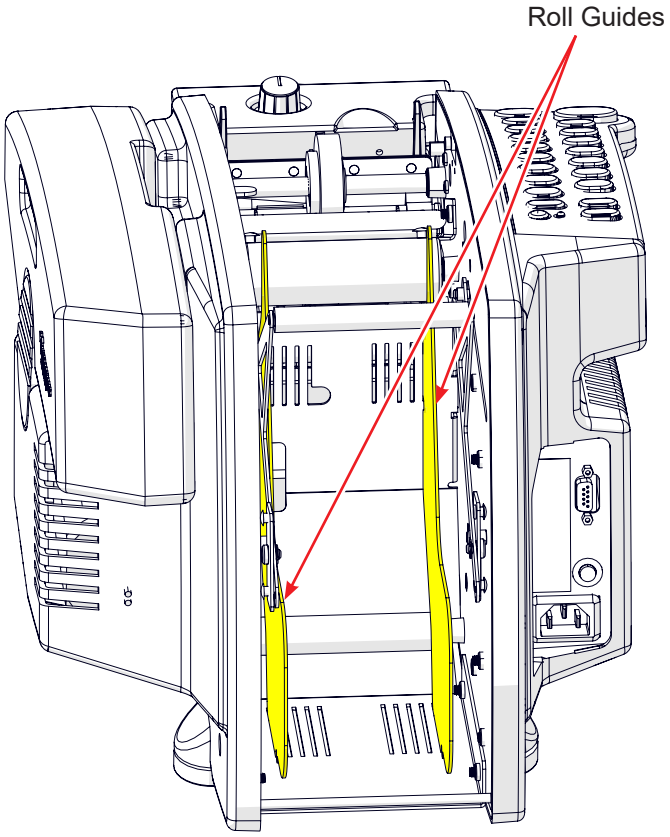

Figure 12: Roll Guides

Set-up Procedure

Installing the Roll Guides

Installing the Roll Guides in the tape basket is simple and easy.

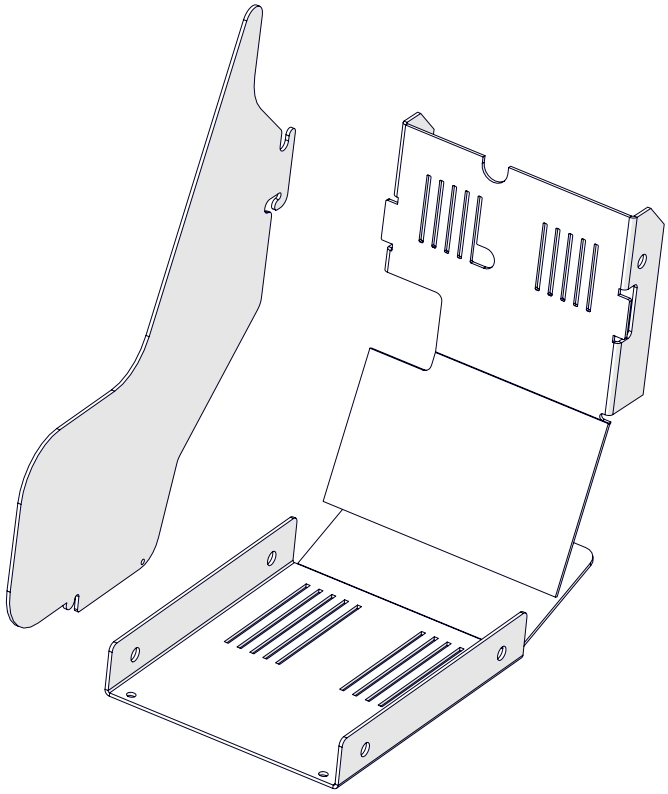

Figure 13: Roll Guide Install 1

1. Open the lid.
2. Take one of the roll guides and angle it slightly so the tab on the long side slips into one of the vertical slots on the forward side of the tape basket.

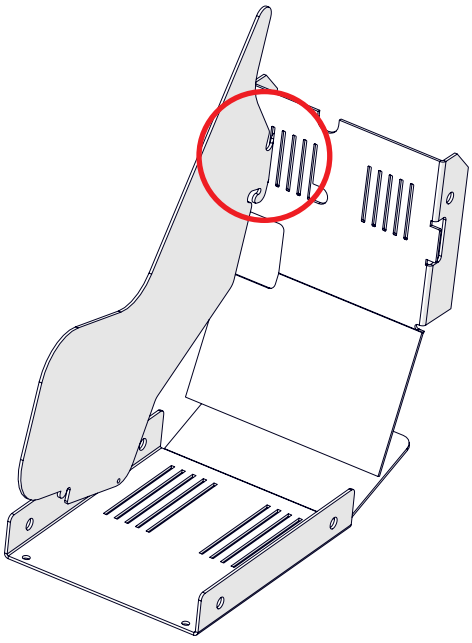

Figure 14: Roll Guide Install 2

3. When the tab is inserted into the slot pull it all the way up to allow the lower tab to be inserted into the slot.
4. This will allow the bottom tab to drop into the corresponding slot in the bottom of the tape basket.
5. Repeat this process for the second roll guide.

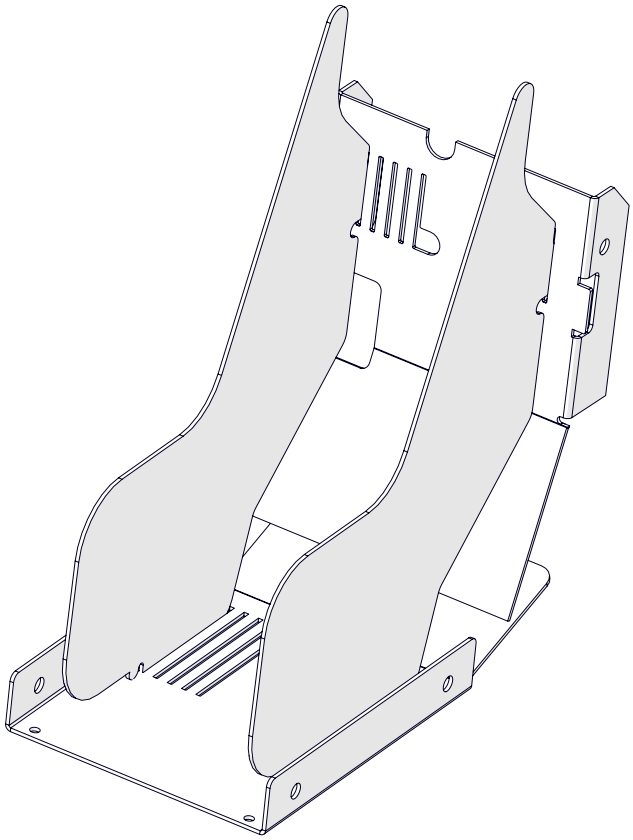

Figure 15: Roll Guides Install 3

6. Optional: If you wish to lock the guides in place where they cannot be unintentionally removed. To do this take a small cable tie and from the underside of the machine feed it through the hole in the roll guide and secure it around the tab. The added width of the cable tie will keep the guides in place.

The 555e is capable of dispensing IPG manufactured water activated tape in widths of 1 ½" to 3" wide.

Set-up Procedure

Loading the Tape Gum Side In

The loading procedure is for eS, eL, eSA, eFA, eFACM, eJ, and eJA

1. Open the lid.
2. Using scissors cut the end of the tape so it is a square clean cut.
3. Place the roll in the tape basket so that:
   - The roll is vertical.
   - The cut end comes from under the roll and over the back.
4. Feed the tape over the Lift Roller and then over the Black Roller.
5. Slip the tape under the upper tape plate and under the feed wheel. The tape should rest up to the blade.
6. Close the lid.

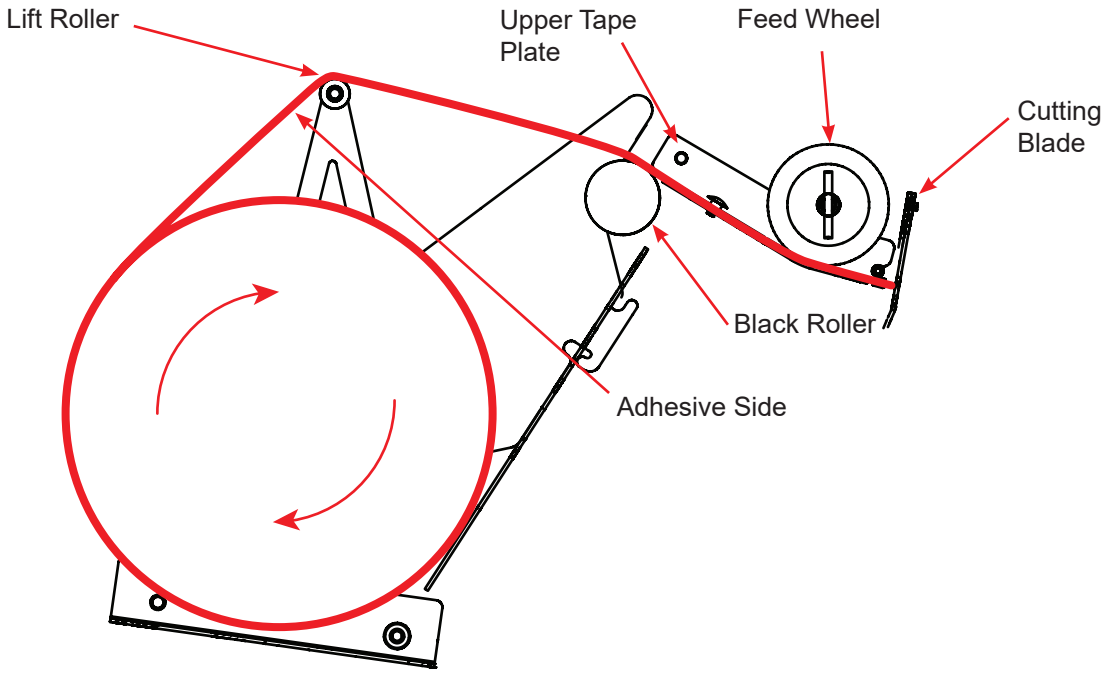

Figure 16: Gum Side In Tape Path

Set-up Procedure

Loading the Tape Gum Side Out

The loading procedure is for eM and eMA

1. Open the lid.
2. Using scissors cut the end of the tape so it is a square clean cut.
3. Place the roll in the tape basket so that:
   - The roll is vertical.
   - The cut end comes from under the roll and up the front of the tape basket.
4. Feed the tape over the Black Roller.
5. Slip the tape under the upper tape plate and under the feed wheel. The tape should rest up to the blade.
6. Close the lid.

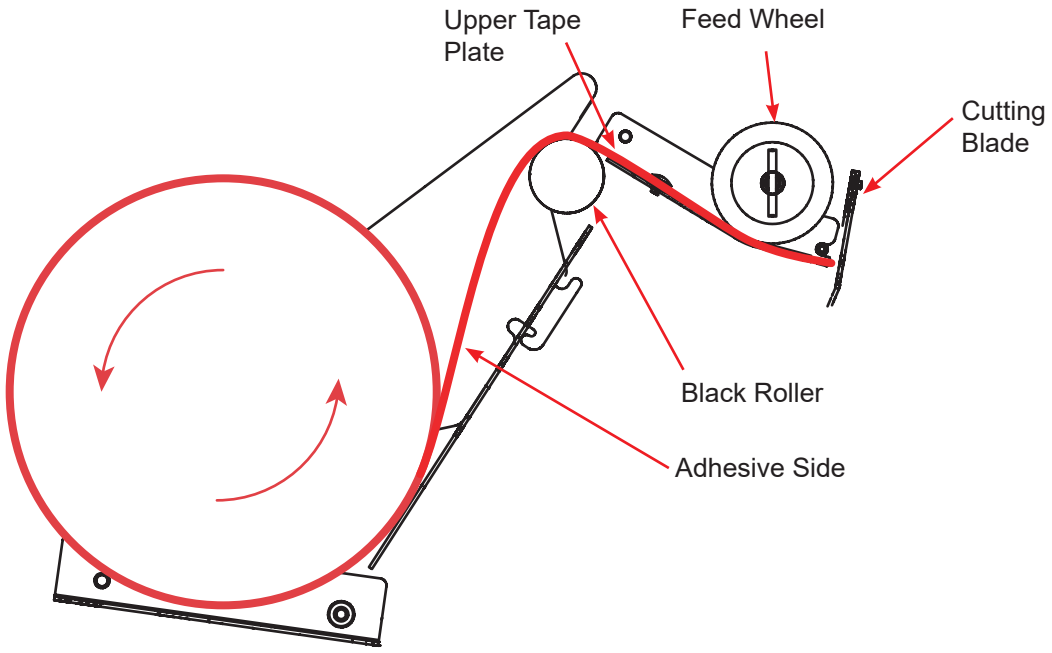

Figure 17: Gum Side Out Tape Path

Checking the Upper Tape Plate

Verify the upper tape plate is completely installed and in the proper position. If the tape plate is not in proper position remove it by grasping the bent upper portion and sliding it out toward the rear of the Dispenser. Verify the tape path is clean and dry before sliding the upper tape plate back into position. It should rest under the guide bar near the blade and be seated around the feed wheel.

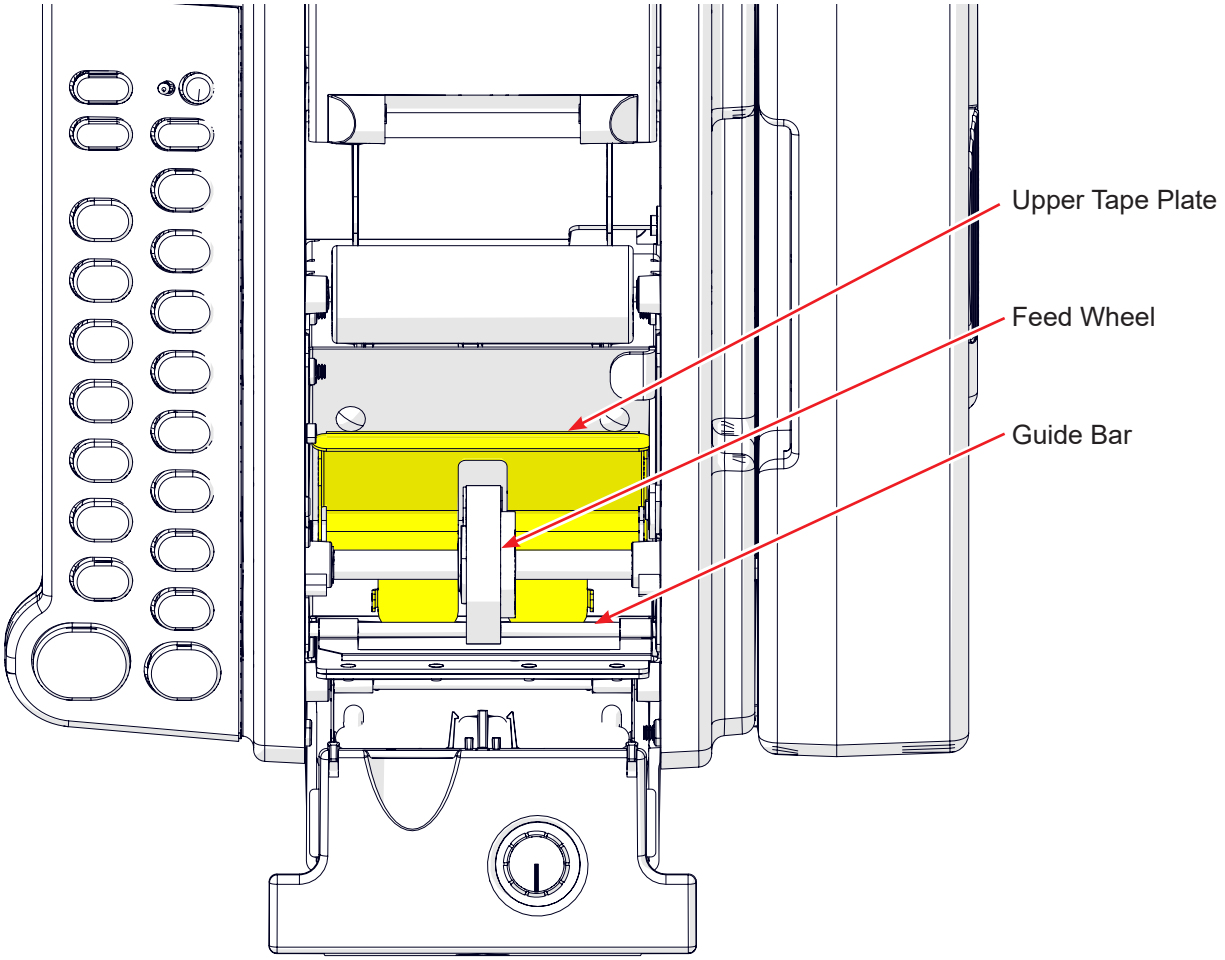

Figure 18: Upper Tape Plate

The Upper Tape Plate is vital for the correct functionality of the Dispenser. If the plate is not in position or is missing the tape will jam.

Set-up Procedure

Installing the Brushes and Water Tank

To install the brush:

1. Orient the brush in the proper direction with the shortest bristles closest to the Dispenser.
2. Place the brush in the opening allowing it rest against the Retaining Bracket.
3. Press down on the brush so that the Retaining Bracket applies pressure to side of the base of the Brush.
4. The brush is properly installed when the bristles are flat across the top of the tank.

Water level can be adjusted with a slider on the right side of the water tank. Moving it closer to the machine will increase the level of water.

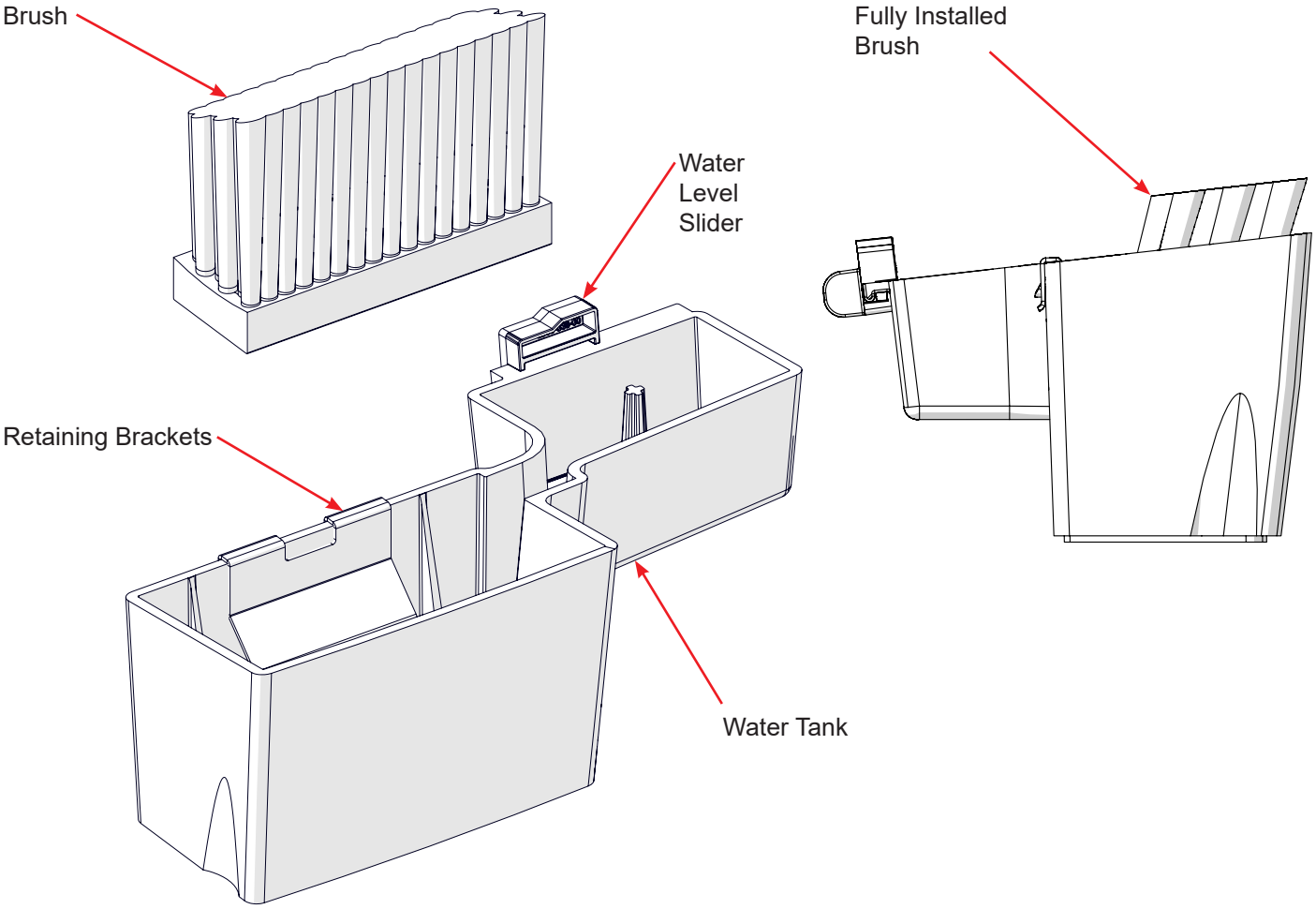

Figure 19: Brush Install

Set-up Procedure

Water Tank Install

CAUTION: UNDER NORMAL OPERATIONAL CONDITIONS THE BOTTOM OF THE HEATER WILL BE HOT. HANDLE THE HEATER ONLY USING THE TABS ON EITHER SIDE OF THE HEATER OR ALLOW TIME FOR THEM TO FULLY COOL BEFORE HANDLING.

1. Grip the tank from end opposite of the brushes.
2. Angle the assembled tank back slightly to allow the brushes to slip under the heaters.
   - If necessary the heater can be lifted by the tabs on either side of the heater to allow for easier install.
3. Lift up slightly and tilt the bottom of the tank into the machine. The base of the tank has a small lip around it locking the tank on the tank shelf.
4. Give the tank a slight nudge back and forth to verify it is fully seated on the shelf.

Water level can be adjusted with a slider on the right side of the water tank. Moving it closer to the machine will increase the level of water.

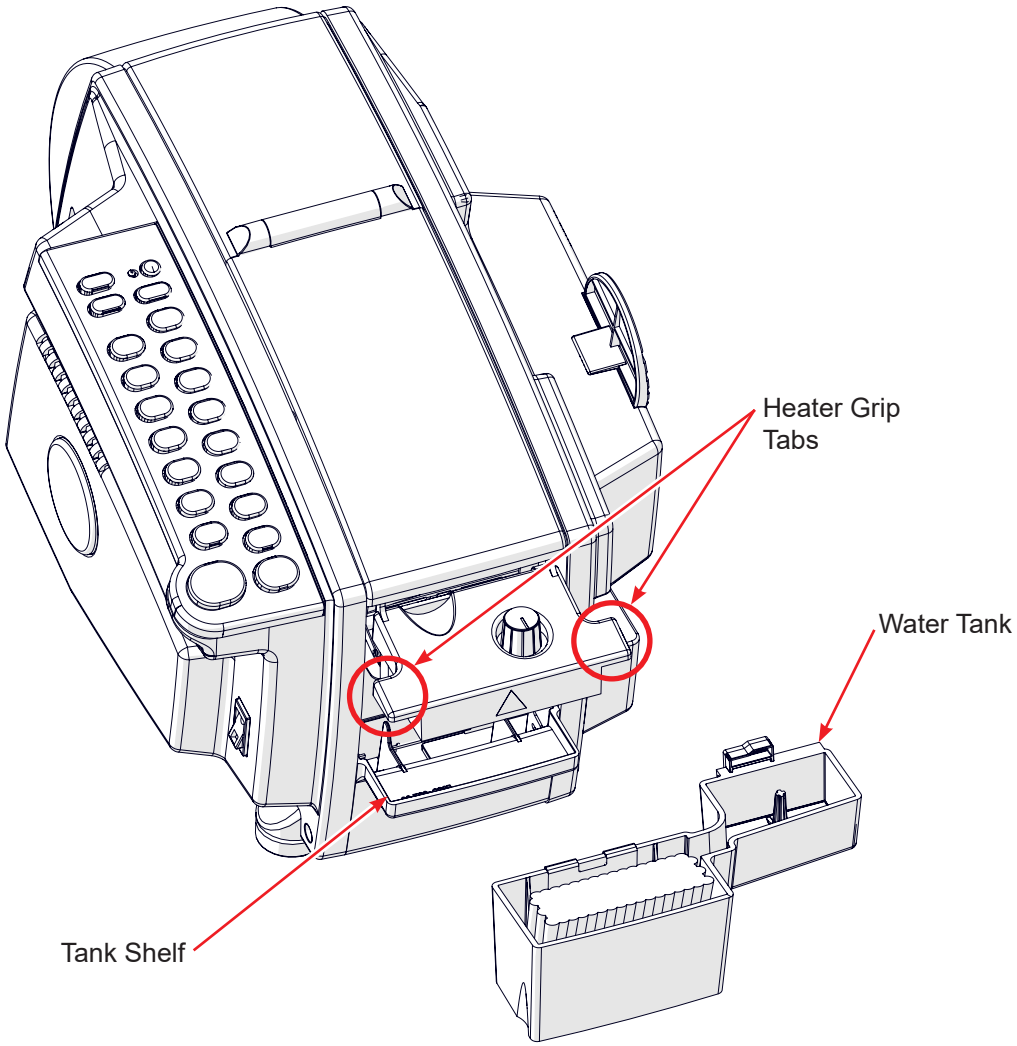

Figure 20: Water Tank Install

Water Bottle Install

The 555e series machines all use the same 64oz (1.8 liter) water bottle. Unscrew the cap and fill it with room temperature water for best results. There is no need for any special water such as distilled water. In the event your facility has hard water or water with a higher than normal mineral count you may want to consider using filtered water.

After filling the water bottle tighten the cap, the membrane will seal the bottle. Place the bottle on shelf, the bottle has an indent to allow the water bottle retainer to keep it in place. The cap should rest around the post in the water tank allowing water to flow freely into the tank. Once the water in the tank has reached the same height as the bottle cap the water will create a seal and stop the flow.

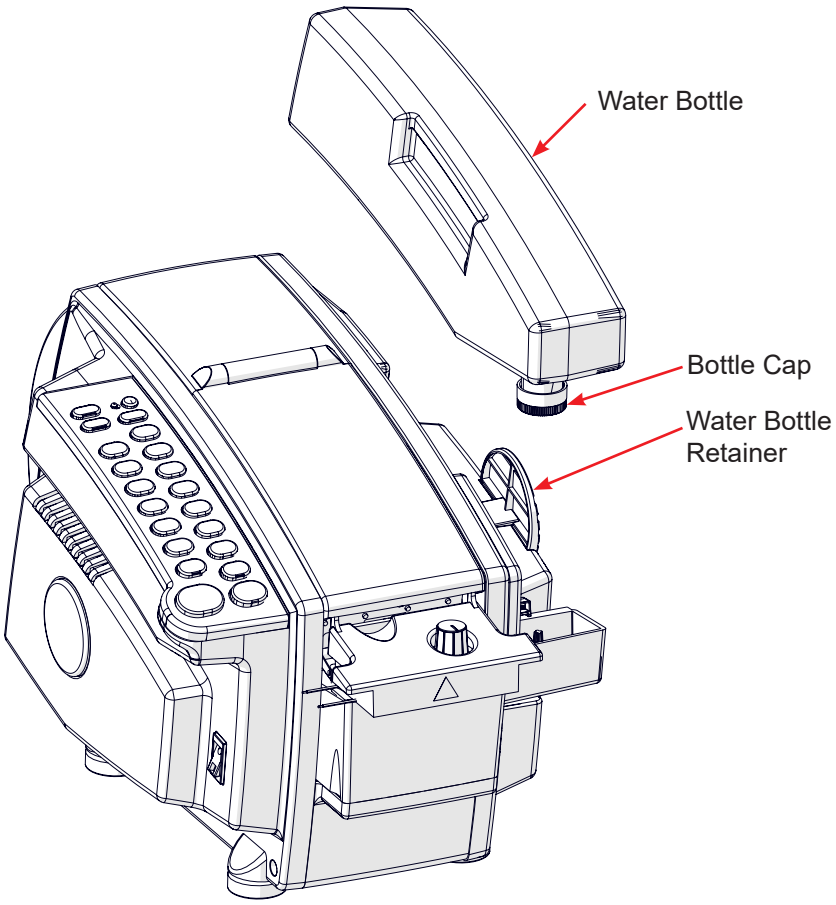

Figure 21: Water Bottle Install

Set-up Procedure

Connecting Power and Utilities

The 555e series machines come equipped with a three (3) pin power socket that is capable of accepting a variety of power cords for use around the world. The Dispenser is also equipped with a 9 pin communication port* and a fuse holder.

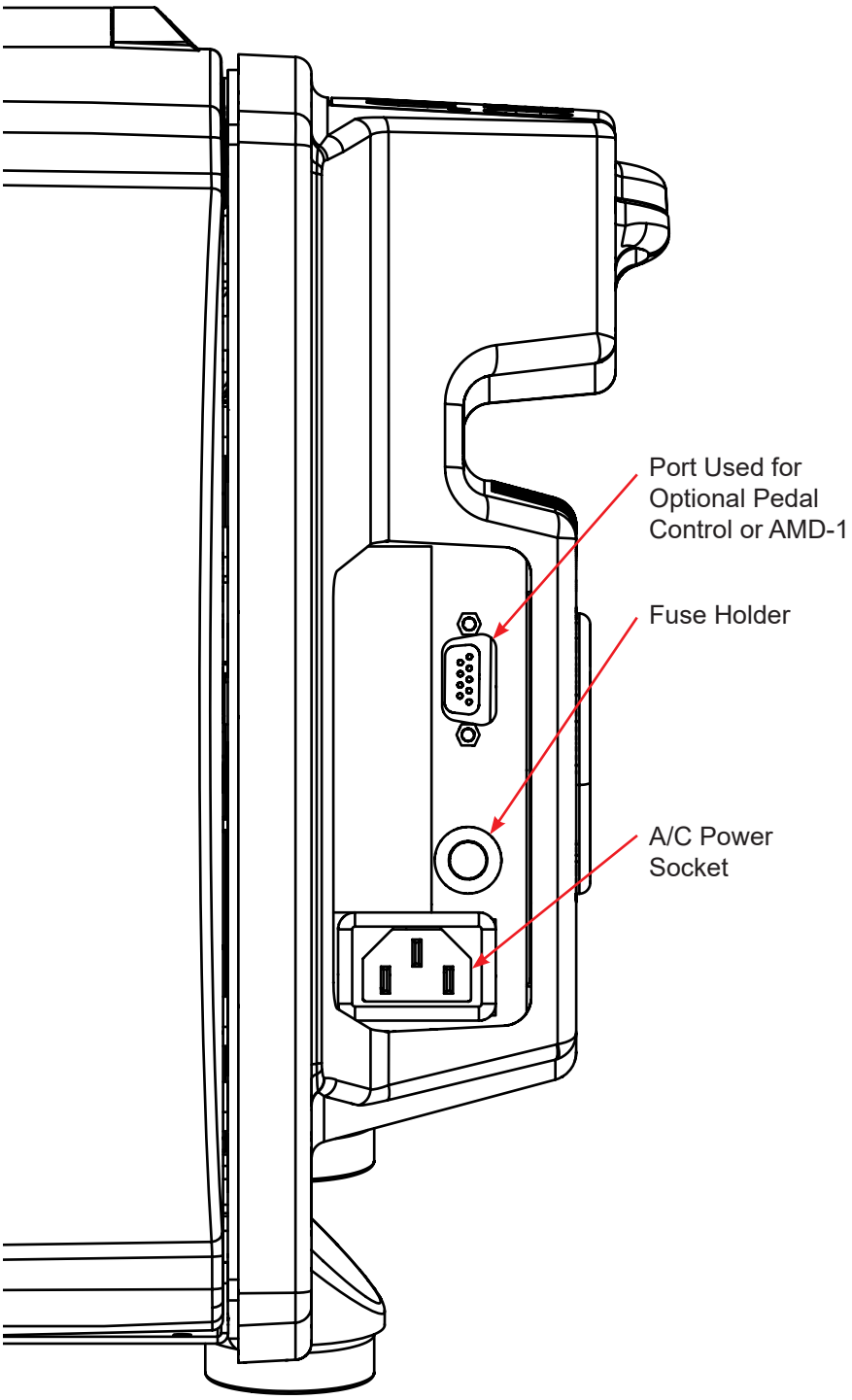

Figure 22: 555e Series Power Panel

Models of the 555e are manufactured for world wide use. See the Technical Specifications section for which model is rated for your power requirements. To connect the Dispenser to power first verify the main power switch is in the Off [O] position, then insert the female end of the cord into the A/C Power Socket, then insert the male end into a properly grounded power outlet, lastly flip the main power switch to the On [I] position. The machine will beep when fully booted.

Only replace the fuse with a 4A 5 x 20mm supplied by Better Packages.

eS, eL, eSA, eFA, eFACM, eJ, and eJA,
Replacement part number ST2341K.

eM and eMA
Replacement part number ST2490.

* Depending on the model the 9 pin communication port can only be used for a foot switch (eS). On automatic models (eSA, eMA, eJA, and eFACM) the 9 pin RS-232 communication port can be used with optional equipment such as a foot switch or the Automatic Measuring Device (AMD-1). This port can also be used to issue commands via an external computer. Always power down the machine before connecting any communication cable.

WARNING: DO NOT TOUCH THE METAL PINS ON THE BACK OF THE MACHINE OR ON THE POWER PLUG AFTER OPERATING THE EQUIPMENT.

CAUTION: ALL METAL PARTS ON THE DISPENSER ARE ELECTRICALLY GROUNDED. IT IS REQUIRED TO USE A PROPERLY GROUNDED POWER OUTLET THAT HAS BEEN INSTALLED BY A PROFESSIONAL.

Setting and Adjusting Temperature

CAUTION: UNDER NORMAL OPERATIONAL CONDITIONS THE BOTTOM OF THE HEATER WILL BE HOT. HANDLE THE HEATER ONLY USING THE TABS ON EITHER SIDE OF THE HEATER OR ALLOW TIME FOR THEM TO FULLY COOL BEFORE HANDLING, AT LEAST 30 MINUTES.

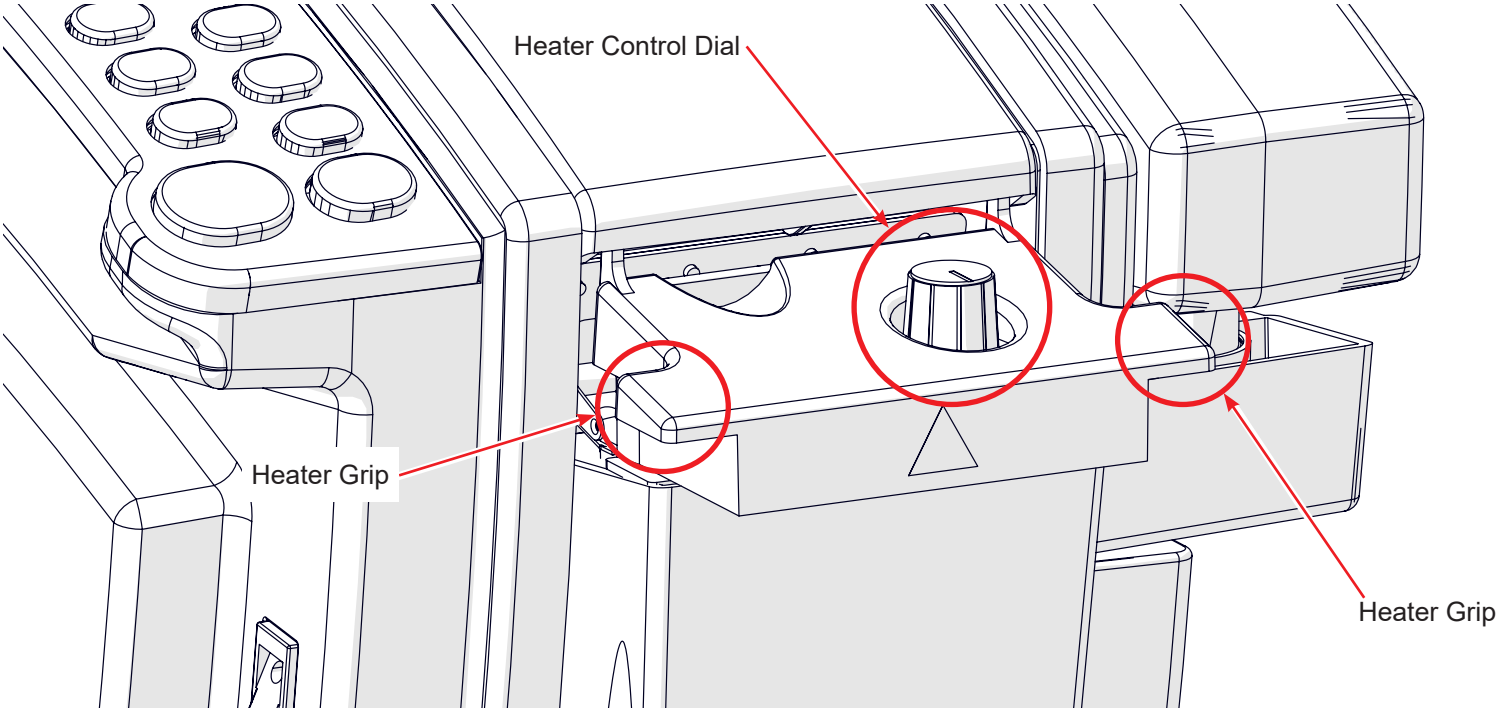

Figure 23: 555e Heater

The 555e series machines use the same heater unit. The heater is adjustable through a knob on the top of unit. It is marked with an OFF, MAX, and five (5) dot marked segments to allow for easy setting. The Dispenser is shipped with the heater in the OFF [O] position.

Rotate the dial to the desired the heat setting. The heater setting is dependent on the environment the Dispenser is in. If the Dispenser is in a climate controlled space the heater will not need to set higher than 50%. This will help extend the life of the heater.

In some models the heaters have a limiting device preventing the operator from turning the heat past a certain point. These are retrofit-able to all 555e series machines. Should you have the need for a limited heater please contact Better Packages Customer Service.

Set-up Procedure

Mount to Work Bench (Optional)

The 555e series machines may be bolted to the work bench or table it sits on. This is to prevent the Dispenser from being knocked off of the work surface should it, or the surface, be bumped into. This will help prevent potentially serious damage to the Dispenser or injury to personnel. The Dispenser is shipped with four (4) rubber feet attached to the bottom with 10-24 Phillips head screws.

1. Drill four holes into the top of the bench or table.
2. Remove the four (4) screws that secure the feet to the bottom of the Dispenser.
3. Measure the thickness of the bench or table. Obtain four (4) 10-24 threaded screws or bolts that are 9/16 to 1-1/16 inches longer than the thickness of the surface.
4. Position the Dispenser so the holes in the surface are aligned with the feet of the Dispenser, keep the rubber feet in place when positioning the Dispenser.
5. Insert the 10-24 screws or bolts through the bottom of the bench or table, through the rubber feet, and into the threaded portion of the bottom panel of the Dispenser.
   - Use a thread locking compound to prevent the screws or bolts from coming loose during normal operation.
   - Use a fender washer between the bottom of the bench or table and mounting screw for additional surface area contact.
   - Tighten the screws so they are snug but are not compressing the rubber feet of the Dispenser.

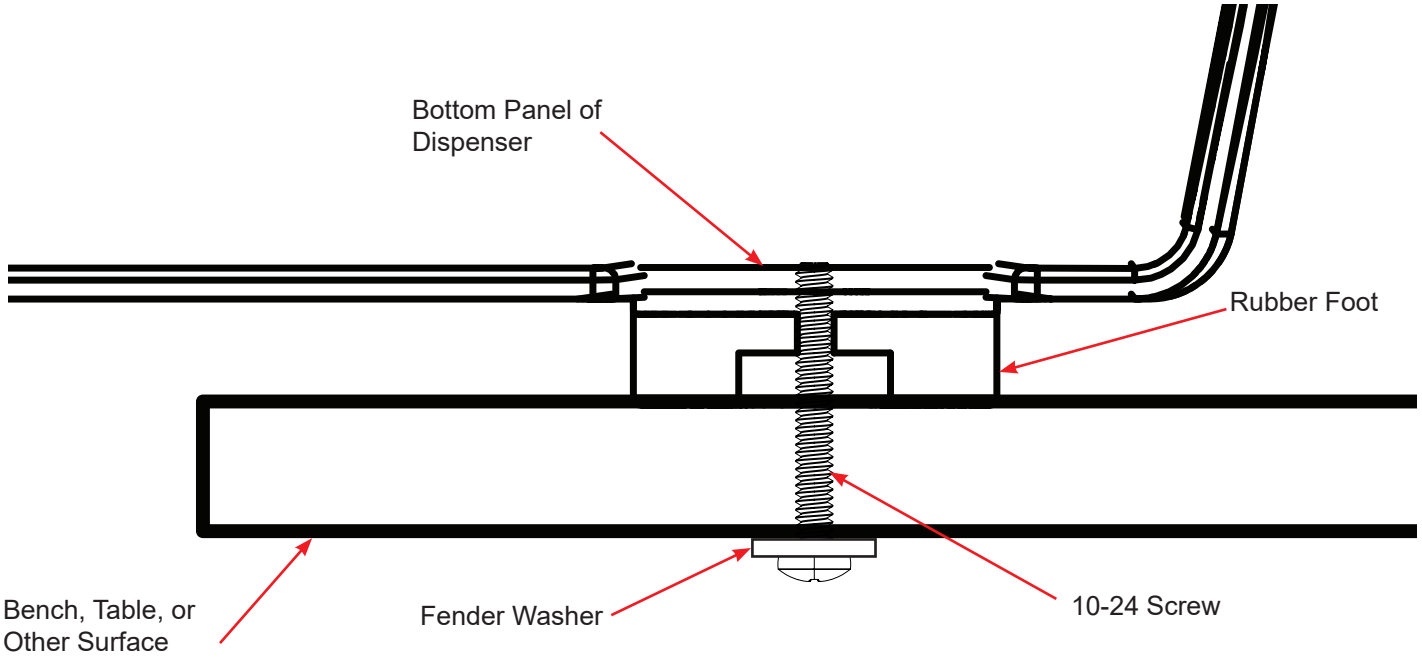

Figure 24: Mounting Dispenser to Surface

Operation

General Operating Procedures

Verify the Dispenser is plugged into a properly grounded outlet. If the power cord is not connected to the Dispenser verify the main power switch is in the off position before connecting the cord to the rear of the Dispenser prior to plugging it into an outlet. See the section titled Connecting Power and Utilities for more details.

Verify tape is loaded correctly. If no tape is loaded see the section titled Loading the Tape for more details.

1. Flip the main power switch. After the machine successfully boots you will hear an audible beep giving the operator an audible alert that the machine is ready for use.
2. Adjust the heaters to the desired setting.
3. Select the desired output on the keypad.

Selecting the Length of Tape



Figure 25: Keypad

The Dispenser allows for lengths of tape ranging from a minimum of 4 inches (102mm) to a maximum of 120 inches (3048mm) in increments of 1/2 inch (13mm).

The 555e keypad has two columns of numbered buttons, length adjustment controls near the top, and repeat button(s) at the bottom. Automatic models will have an automatic mode button and indicator light at the top of the keypad and a Repeat 2 key at the bottom.

The top of the keypad contains a “+” and a “-” button. The “+” button will add 1/2 inch (13mm) to the length selected on the keypad. The “-” button will subtract 1/2 inch (13mm) from the length selected on the keypad. The “2x” button will double the selected length on the keypad.

Depending on the model of machine the buttons below the length options will vary.

Automatic Models:

On automatic models there will be three (3) buttons: Repeat/Start, Repeat 2/Enter, and Random. In normal operation mode the Repeat/Start button will repeat the last dispensed length of tape. In normal operation mode the Repeat 2/Enter button will repeat the second to last length of tape dispensed. In Automatic Mode the Repeat/Start button will begin the operator entered program. In Automatic Mode the Repeat 2/Enter button will store the selected length. The Random button will dispense tape for as long as the operator holds down the button.

See Programming the Automatic 555e for detailed operation instructions.

Standard Models:

On Standard models there will be two (2) buttons: Repeat/Start, and Random. The Repeat/Start button will repeat the last dispensed length of tape. The Random button will dispense tape for as long as the operator holds down the button.

Operation

Dispense a Length of Tape Longer Than the Number on the Keypad

The below examples will use the operation samples from the 555eS but will apply to any model of 555e, including those of a custom keypad.

Press  then  to dispense a length of tape of 24.5 inches

Press  then  then  to dispense a length of tape of 25 inches

Press  then  to dispense a length of tape of 48 inches

Pressing the “+” button once will add 1/2 inch (13mm) to the selected length of tape. Pressing the “+” button twice will add 1 inch (25mm) to the selected length of tape.

Dispense a Length of Tape Shorter Than the Number on the Keypad

The below examples will use the operation samples from the 555eS but will apply to any model of 555e, including those of a custom keypad.

Press  then  to dispense a length of tape of 23.5 inches

Press  then  then  to dispense a length of tape of 23 inches

Pressing the “-” button once will subtract 1/2 inch (13mm) to the selected length of tape. Pressing the “-” button twice will subtract 1 inch (25mm) to the selected length of tape.

Advanced Adjustment of a Number on the Keypad

The below examples will use the operation samples from the 555eS but will apply to any model of 555e, including those of a custom keypad.

Press  then  then  then  then  to dispense 49.5 inches

The dispenser is capable of making advanced adjustments of selectable options on the keypad. In the above example the selected length is doubled and then 1.5 (38mm) inches is added to the doubled amount.

Operation

Programing the Automatic 555e

The automatic models of the 555e (555eSA, 555eMA, 555eFA, and 555eJA) allow an operator to program in a basic set of lengths, up to 3. This allows for operators to efficiently seal known patterns of cartons or a more complex seal, such as an H pattern.

Automatic Mode will dispense the programmed lengths. When the operator removes the tape from the dispense it will automatically dispense the next length in the sequence. Sequences can be as little as a single length or up to three (3) unique lengths. This includes alterations using the “+” or “-” or “2x” or Random keys.

Programming the Automatic 555e machines is simple and easy:

Activate Automatic Mode

To activate the Automatic Mode press the “A” button at the top of the keypad. An audible beep will sound and the indicator light next to the “A” button will be illuminated red.

Programming a Single Length

Once Automatic Mode has been activated follow the below instructions to program a single length.

The below examples will use the operation samples from the 555eSA but will apply to any automatic model of 555e, including those of a custom keypad.

Press 

… a 24 inch piece of tape will be dispensed. Remove the tape and apply it to the carton.

Press 

this will store the length to memory.

Press 

this will start the recorded program.

Once started the dispenser will automatically dispense a 24 inch piece of tape. When the operator removes the tape the 555e will automatically dispense the next 24 inch strip of tape.

Programming Two Lengths

Once Automatic Mode has been activated follow the below instructions to program a single length.

The below examples will use the operation samples from the 555eSA but will apply to any automatic model of 555e, including those of a custom keypad.

Press 

… a 24 inch piece of tape will be dispensed. Remove the tape and apply it to the carton.

Press 

this will store the length to memory.

Press 

… a 6 inch piece of tape will be dispensed. Remove the tape and apply it to the carton.

Press 

this will store the length to memory.

Press 

this will start the recorded program.

Once started the dispenser will automatically dispense a 24 inch piece of tape. When the operator removes the tape the 555e will automatically a 6 inch strip of tape. Once the last strip of the sequence has been removed the program will start over and automatically dispense a 24 inch piece of tape.

Programming Three Lengths

Once Automatic Mode has been activated follow the below instructions to program a single length.

The below examples will use the operation samples from the 555eSA but will apply to any automatic model of 555e, including those of a custom keypad.

Press 

… a 24 inch piece of tape will be dispensed. Remove the tape and apply it to the carton.

Press 

this will store the length to memory.

Press 

… a 6 inch piece of tape will be dispensed. Remove the tape and apply it to the carton.

Press 

this will store the length to memory.

Press 

… a 12 inch piece of tape will be dispensed. Remove the tape and apply it to the carton.

Press 

this will store the length to memory.

Press 

this will start the recorded program.

Once started the dispenser will automatically dispense a 24 inch piece of tape. When the operator removes the tape the 555e will automatically a 6 inch strip of tape. When the second length is removed the 555e will dispense a 12 inch strip of tape. Once the last strip of the sequence has been removed the program will start over and automatically dispense a 24 inch piece of tape.

Turning Off Automatic Mode

There are two (2) methods to turn off Automatic Mode. The first is to press the “A” button to return to standard operation. The second option is to turn off the dispenser. Turning off the dispenser and/or pressing the “A” button will clear the memory of the stored operator installed program.

Practical Use of the Automatic Mode

A common use of Automatic Mode is applying tape in a “H” pattern to a box. The “H” pattern of taping a box is a method commonly used to reinforce the seams and edges of the box for added strength and stability. This is usually applied on cases for long term storage, heavy or fragile items, and international shipping where cartons tend to be processed through several hand off points.

Programming an “H” Pattern

Once Automatic Mode has been activated follow the below instructions to program a single length.

The below examples will use the operation samples from the 555eSA but will apply to any automatic model of 555e, including those of a custom keypad.

Press 24 … a 24 inch piece of tape will be dispensed. Remove the tape and apply it to the carton.

Press REPEAT 2 / ENTER this will store the length to memory.

Press 6 … a 6 inch piece of tape will be dispensed. Remove the tape and apply it to the carton.

Press REPEAT 2 / ENTER this will store the length to memory.

Press 6 … a 6 inch piece of tape will be dispensed. Remove the tape and apply it to the carton.

Press REPEAT 2 / ENTER this will store the length to memory.

Press REPEAT / START this will start the recorded program.

Once started the dispenser will automatically dispense a 24 inch piece of tape. When the operator removes the tape the 555e will automatically a 6 inch strip of tape. When the second length is removed the 555e will dispense a 6 inch strip of tape. Once the last strip of the sequence has been removed the program will start over and automatically dispense a 24 inch piece of tape.

The “H” pattern of taping is a versatile method that can be applied in various situations where secure packaging is essential to protect the contents of the carton during handling, shipping, or storage.

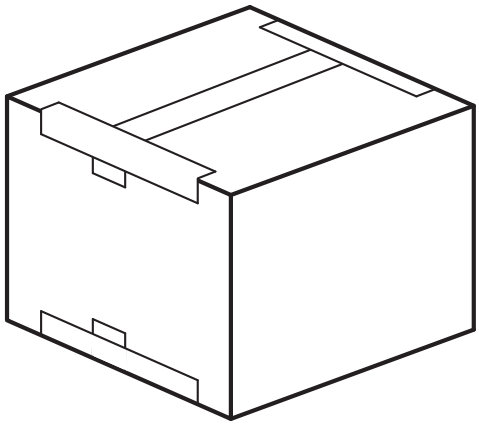

Figure 26: “H” Pattern

Applying Tape to a Carton

Choosing the Correct Tape Type

TYPE	CHARACTERISTIC
Paper Tape or Kraft Paper Tape	Made from paper only, with no additional reinforcing material
Reinforced Tape or Reinforced Paper Tape	Made from paper and contains additional strands of reinforcing material, typically fiberglass

IPG offers a variety of different grades of Paper Tape or Kraft Paper Tape. In most circumstances this non-reinforced tape is good for smaller and lighter cartons.

IPG offers a variety of different grades of Reinforced Tape or Reinforced Paper Tape. In most circumstances this reinforced tape is good for larger boxes and those with increased weight.

Contact your Authorized IPG Representative for the best tape for your applications.

Choosing the Correct Tape Length

In most situations it is recommended to dispense a length of tape that is equal to the length of seam on the carton with an additional 4-6 inches (101-152mm) to allow for tape legs on either end of the carton.

In the event the carton is extremely long an additional 6-8 inches (101-203mm) is recommended for tape legs.

In the event the carton is short an additional 3-4 inches (76-101mm) is may be used.

Proper Tape Moistening

Dispense a piece of tape and examine the adhesive surface. The tape should:

- Be evenly wet
- Have no dry spots
- Have no spots where water is running off the surface.

Rub the wet adhesive with your finger.

- The adhesive should have an “oily” feel and consistency.
- You should be able to move the adhesive underneath your finger.

When you rub two wet adhesive surfaces of the tape together against each other, you should see “strings” of adhesive stretching between the two surfaces as you pull them apart, looking much like taffy as it is pulled.

If the tape is too wet or watery, it:

- Will not set fast enough
- May slip slightly over the surface of the carton, causing a “loose” seal If the tape is not wet enough, it:
- May be tacky or sticky like pressure sensitive tape, but not “oily” like properly moistened tape.
- Is too dry to properly activate the adhesive which will prevent a permanent bond from forming (because the adhesive cannot penetrate the corrugate fibers).
- May too easily pull off the carton during handling and transportation.

Applying Tape to a Carton

Sealing the Carton

The best way to apply the tape to the carton is:

1. Place the wet tape on the end of one of the flaps to be sealed so that:
   - Half of the tape's width is on one flap
   - The other half is overhanging
2. Fold the flap without the tape down to its closed position.
3. Fold the other carton flap (the one with the overhanging tape) down into its proper closed position so that the overhanging portion of the tape is now in contact with the other flap on the opposite side of the carton.
4. Starting from the middle of the carton, apply a light downward pressure and wipe your hands over the tape on top of the carton flaps. Move from the center to the sides and then down over the overlapping ends in the sides of the carton. Sometimes wiping the tape down a second time before releasing the carton is helpful

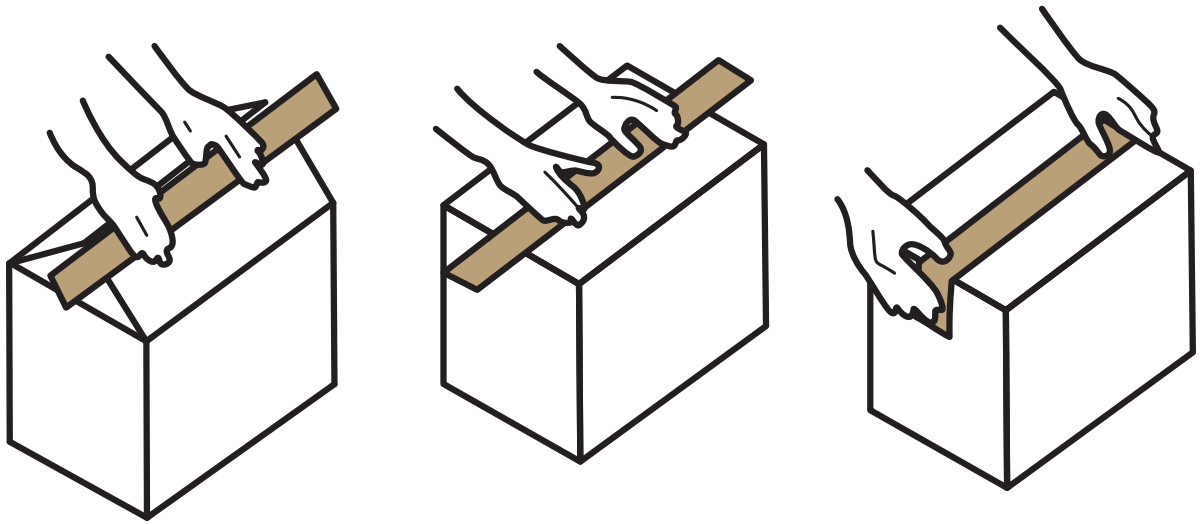

Figure 27: Applying Tape

Common Tape Patterns

The following are commonly used tape patterns. **"H" pattern** or sometimes referred to as the **"I" pattern** is when the center seam is sealed as normal and two more strips of tape are applied to seal the sides of the minor flaps. This allows for a secure and aesthetically pleasing carton. The **"Belly Band"** is when a strip of tape is placed in the opposite direction of the center seam. This helps secure heavier loads and is applied to the top and bottom of the box. The **"X" pattern** is more rarely used but is considered the most secure and is a cross between the "H" pattern and the "Belly Band." It is used for extremely heavy items.

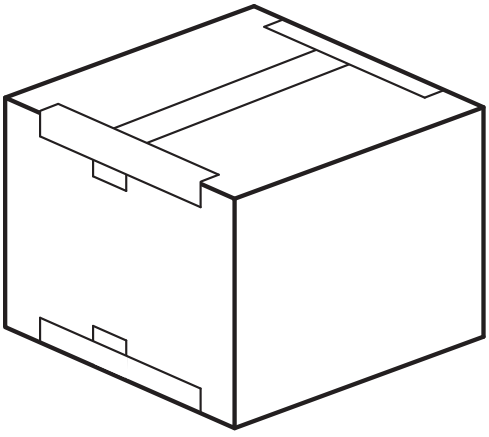

Figure 28: "H" Pattern

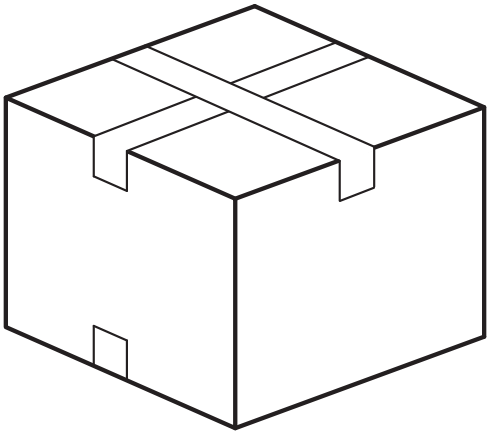

Figure 29: Belly Band

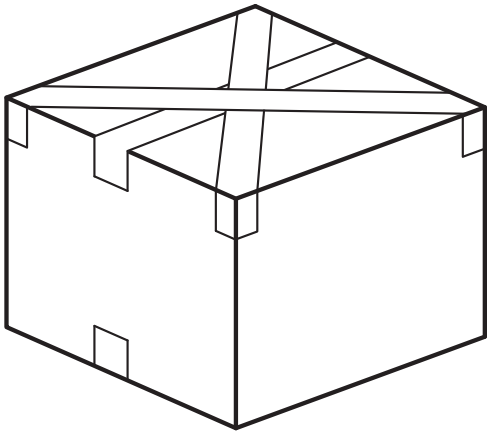

Figure 30: "X" Pattern

Preventative Maintenance

Suggested Preventative Maintenance Schedule

WARNING: TURN OFF ELECTRICAL POWER SUPPLY BEFORE PERFORMING MAINTENANCE. THE CUT-OFF BLADE IS EXTREMELY SHARP USE CUT RESISTANT GLOVES WHEN SERVICING OR REPLACING THE BLADE. THE HEATER WILL BE HOT. ALLOW TIME TO COOL PRIOR TO SERVICING.

Weekly

- Wash brushes with mild soap and water. Rinse well to remove all soap residue.
- Clean any accumulated dust with a dry brush or blower.
- Wash water tank with mild soap and water. Rinse well to remove all soap residue.

Monthly

- Clean accumulated glue from blades using a scraper. Do not scrape the cutting edge of the blade this can cause damage and may result in needing to change the blade.
- Apply a light coating of a light machine oil to the back of the blade.
- Add only a few drop of a light machine oil to felt pads.

Annually

- Thoroughly clean all accumulated pieces of tape, dust, and any other foreign material from inside the Dispenser with a dry brush or blower.
- Clean the bottom of heaters and pressure plates of accumulated tape adhesive.
- Clean all covers with a damp rag.

Washing the Tank, Brush, and Bottle

Water Brush: Glue from the tape may accumulate and reduce the effectiveness of the moistening system. Wash brushes weekly with mild soap. Be sure to agitate the bristles while in the soap and water solution. A brush is considered clean after this agitation and all adhesive build up has been removed.

It is recommended to soak brushes in a solution of mild soap and water overnight. This will reduce any adhesive build up and extend the life of the brushes.

If you operate multiple machines all brushes may soak in the same container.

Rinse the brushes in running warm water before reinstalling them into a clean water tank.

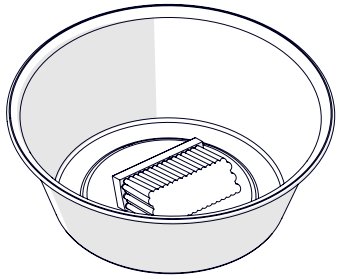

Figure 31: Brush Cleaning

Water Tank: Glue from the tape may accumulate in the water tank. This build up can accumulate in the water brushes and result in a reduction of water transmission to the tape and a weaker bond to the carton.

It is recommended to wash the water tank once a week in a warm soap and water solution. Use a low-scratch abrasive brush to clean the bottom of the water tank as well as the tight areas. Rinse the water tank in running warm water before reinstalling.

Water Bottle: Hard water build up may appear in the water bottles over time. If you have hard water or other mineral rich water it is recommended to use a filtered water to extend the life of the water brush as well as the seal in the water bottle cap.

It is recommended to wash out the water bottle once a week with a warm soap and water solution. Fill the bottle ¼ to ½ with the soap and water solution. Secure the water bottle cap, then shake the bottle vigorously. Allow the bottle to drain before rinsing with warm water. Allow the water bottle to fully dry before reusing.

In extreme circumstances the water bottle may be cleaned with a white vinegar and water solution but it would be recommended to replace the water bottle and its cap.

The adhesive is non-toxic and water soluble. If adhesive builds up on an operator's hands, washing with soap and water will remove any debris. Standard packing gloves or other required PPE should be used in accordance with plant policies where the dispenser is being operated in.

Troubleshooting

PROBLEM	POSSIBLE CAUSES	SOLUTIONS
Tape is too short	Feed wheel is out of adjustment	Conduct a feed wheel check and adjustment.
Tape is too long	Damaged encoder wheel	Remove left side cover and verify the integrity of the encoder wheel.
	Keypad connector is not connected properly	Remove the left side cover and verify the data ribbons are connected to all pins. If the keypad is shifted it will still function but keys will no longer work as desired.
Dispenser not outputting tape	Dispenser is unplugged	Verify the power cord is connected to the Dispenser and a properly functioning grounded outlet.
	Dispenser is off	Flip the main power witch to the ON position.
	Safety interlock system is interrupted	Verify the lid(s) of the Dispenser are closed. Verify the magnet in the left side of the lid(s) is in place. Verify the lid is properly closed and not skewed.
	Fuse is blown	Replace the main fuse. Use a fuse rated at AL T2 250V. For eSA, eJA, eL, eS use ST2341K For eFA, eMA use ST-2490
	Keypad is disconnected	Remove the left side cover and verify the data ribbons are connected to all pins.
	Main Board is damaged	Verify the Dispenser is connected to a working outlet and plugged in, flip the main power switch to the ON position, the Dispenser should have an audible beep. If there is no beep the Main Board will need replacement.
Poor tape wetting	Low water level	Adjust the height of the Water Bottle using the slider on the Water Tank.
	Dirty application brushes	Soak the brushes in warm water and clean with mild soap.
	Tape is not making contact with the brushes	Verify the heater is properly mounted and not damaged.
	Water Bottle empty	Refill the Water Bottle

For Set-up, Operation, and Maintenance Videos please visit www.betterpackages.com/tape-dispenser-videos/

If you are experiencing trouble with your Dispenser or it is functioning in a way that is not consistent with this manual please contact IPG Machinery Support at +1 813-345-3070 between the hours of 8am and 7pm Eastern Standard Time or via email at machsupp@itape.com.

Decommissioning/Disposal

When the dispenser reaches the end of its service life or is being permanently removed from service:

1. Turn the dispenser OFF and disconnect the power cord from the electrical supply.
2. Allow the heater and other heated components to cool completely before handling.
3. Remove the roll of water-activated tape and any remaining tape from the tape path.
4. Remove and empty the water bottle and water tank.
5. Clean and dry the water bottle, water tank, brushes, and other areas containing water or adhesive residue.
6. Remove any accessories or externally connected devices.
7. If the dispenser is secured to a work surface, remove the mounting hardware before moving the dispenser.
8. Dispose of or recycle the dispenser and its components in accordance with applicable local regulations.

Do not dispose of the dispenser or its electrical and electronic components with unsorted municipal waste where prohibited. Separate electrical, electronic, metal, plastic, and other materials as required by applicable local regulations. Contact the appropriate local recycling or waste-management authority for disposal requirements.

Appendix

Parts Listing

Commonly Ordered Parts 38
Exterior Components 39
Electrical Board Assembly 40
Drive Assembly 41
Tape Path 42
Solenoid and Cutting Assembly 43
Idler Assembly 44
Frames 45
Lift Cam Assembly 46
Part Replacement Kits 47

Parts in the 555e can be categorized into one of three categories:

1. Individual components, shown by a single call out.
2. Electrical components that are dependent on regional power, shown by multiple call outs to a single part.*
3. Kits that are comprised of multiple parts for ordering convenience, shown by having a box around a group of parts.

*Components with multiple call outs will have the associated 555e model in the description. If you are unsure of the model of your 555e please contact IPG Machinery Support +1 813-345-3070 or machsupp@itape.com.

To order parts please contact Better Packages Customer Service 1-203-926-3700 or 1-800-237-9151 (United States only), parts can also be found directly at www.betterpackages.com/parts

Single Components

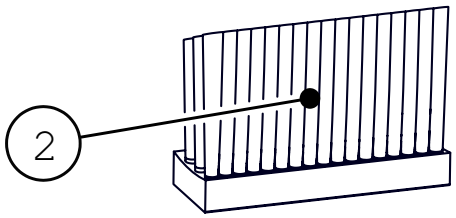

Electrical Components

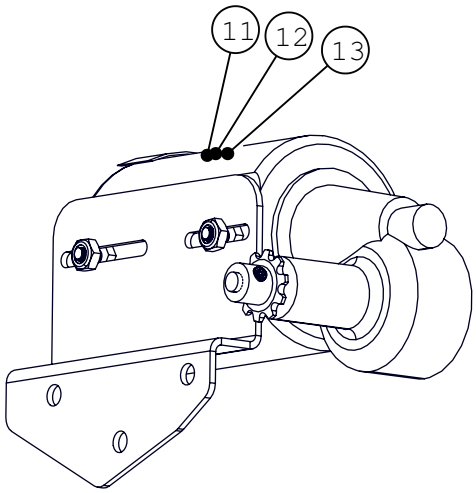

Kit Components

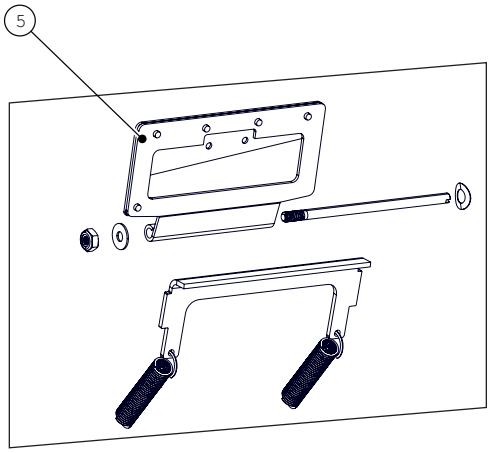

Recommended Spare Parts

The following is a list of parts that is recommended to keep on hand.

Description	Item Number	QTY
Brush	E555-132-01	1
Upper Tape Plate	E555-018-00	1
Fuse*	4A ST-2341K 2A ST-2490	1
Feed Wheel	E555-039-06	1

*4A fuse is for eS, eSA, eL, eJ, eJA | 2A fuse is for eM, eMA, eFA, eFACM

Appendix

Commonly Ordered Parts

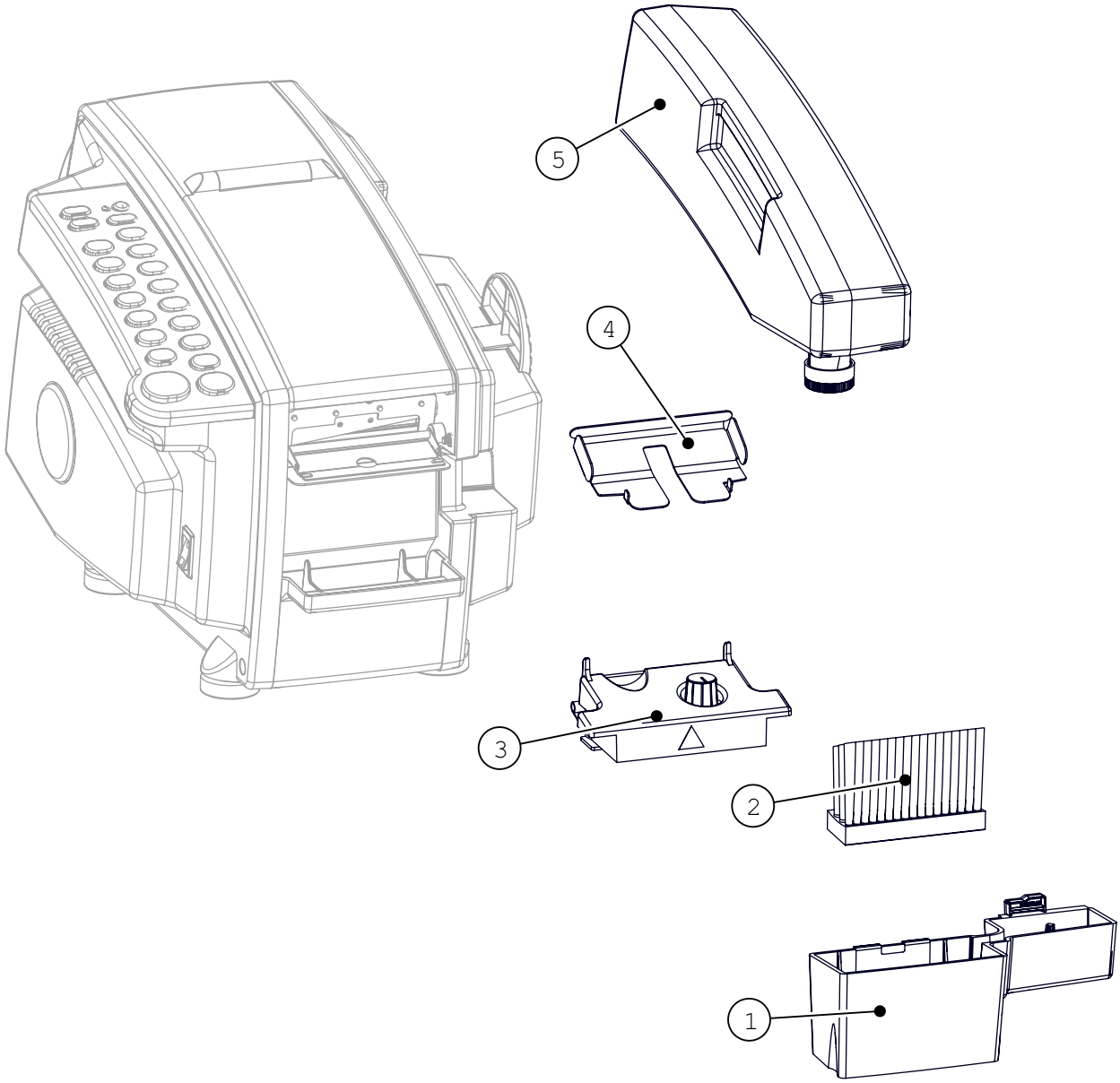

ITEM	DESCRIPTION	PART NUMBER	QTY
1	WATER TANK ASSY	E555-033-01	1
2	BRUSH ASSY	E555-132-01	1
3	ASSY, TOP HEATER	E555-007-01	1

ITEM	DESCRIPTION	PART NUMBER	QTY
4	UPPER TAPE PLATE	E555-018-00	1
5	WATER BOTTLE KIT	E555-264-01	1

Appendix

Exterior Components

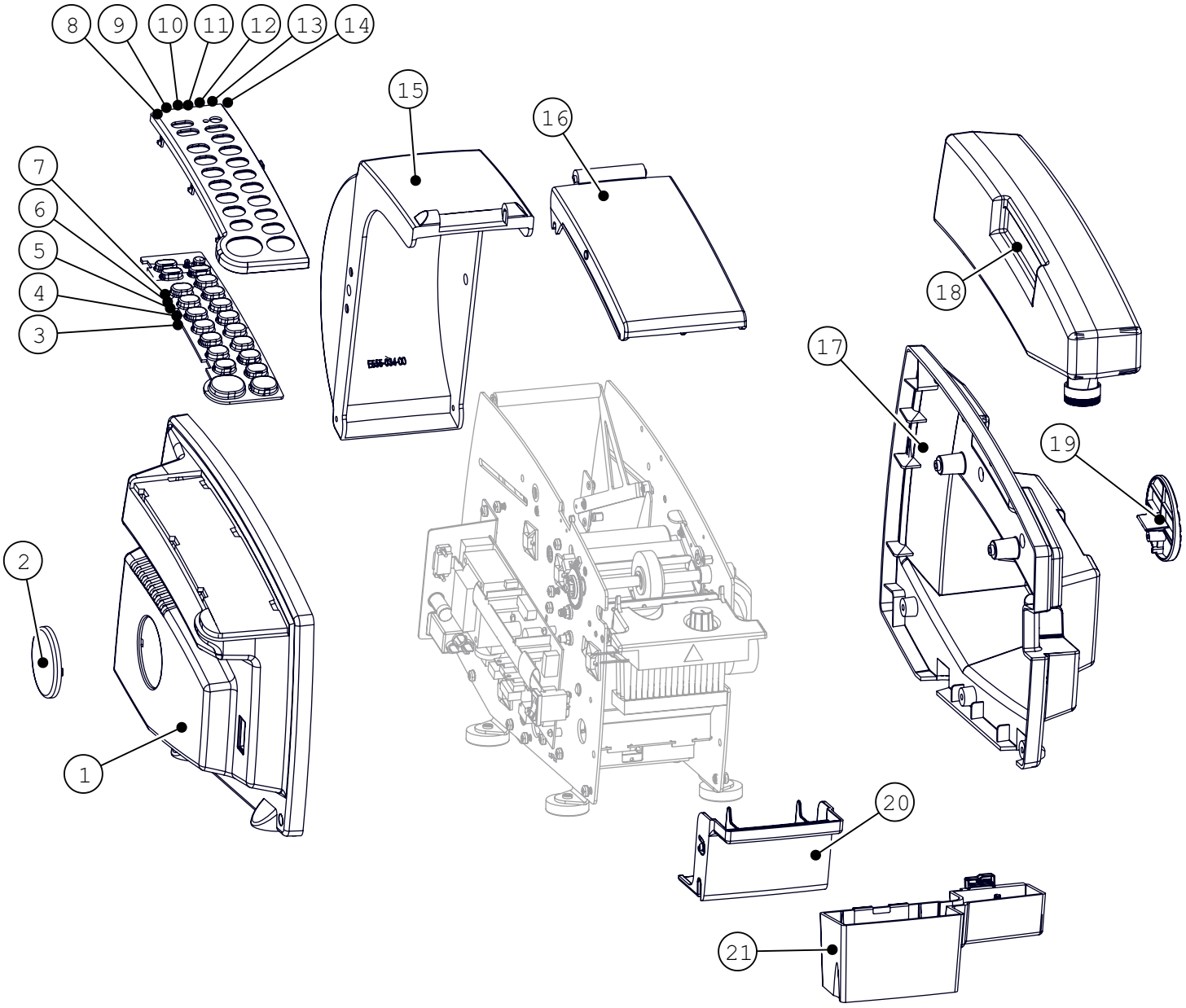

ITEM	DESCRIPTION	PART NUMBER	QTY
1	COVER, LEFT	E555-030-00	1
2	BADGE	E555-055-00	1
3	SWITCH PAD & MEMBRANE 555eS	E555-003-01	1
4	SWITCH PAD & MEMBRANE 555eSA/EFA	E555-003-02	1
5	SWITCH PAD & MEMBRANE 555eL	E555-003-03	1
6	SWITCH PAD & MEMBRANE 555eLA	E555-003-04	1
7	SWITCH PAD & MEMBRANE 555eMA/eJA	E555-003-06	1
8	BEZEL eS	E555-039-01	1
9	BEZEL eSA	E555-039-02	1
10	BEZEL eL	E555-039-03	1
11	BEZEL eLA	E555-039-04	1

ITEM	DESCRIPTION	PART NUMBER	QTY
12	BEZEL eMA	E555-039-06	1
13	BEZEL eJA	E555-039-08	1
14	BEZEL eFA	E555-039-10	1
15	REAR COVER	E555-034-00	1
16	COVER - TOP	E555-035-00	1
17	COVER, RIGHT	E555-031-00	1
18	WATER BOTTLE KIT	E555-264-01	1
19	BOTTLE RETAINER	E555-037-00	1
20	SHELF, WATER TANK	E555-032-00	1
21	WATER TANK ASSY	E555-033-01	1

Electrical Board Assembly

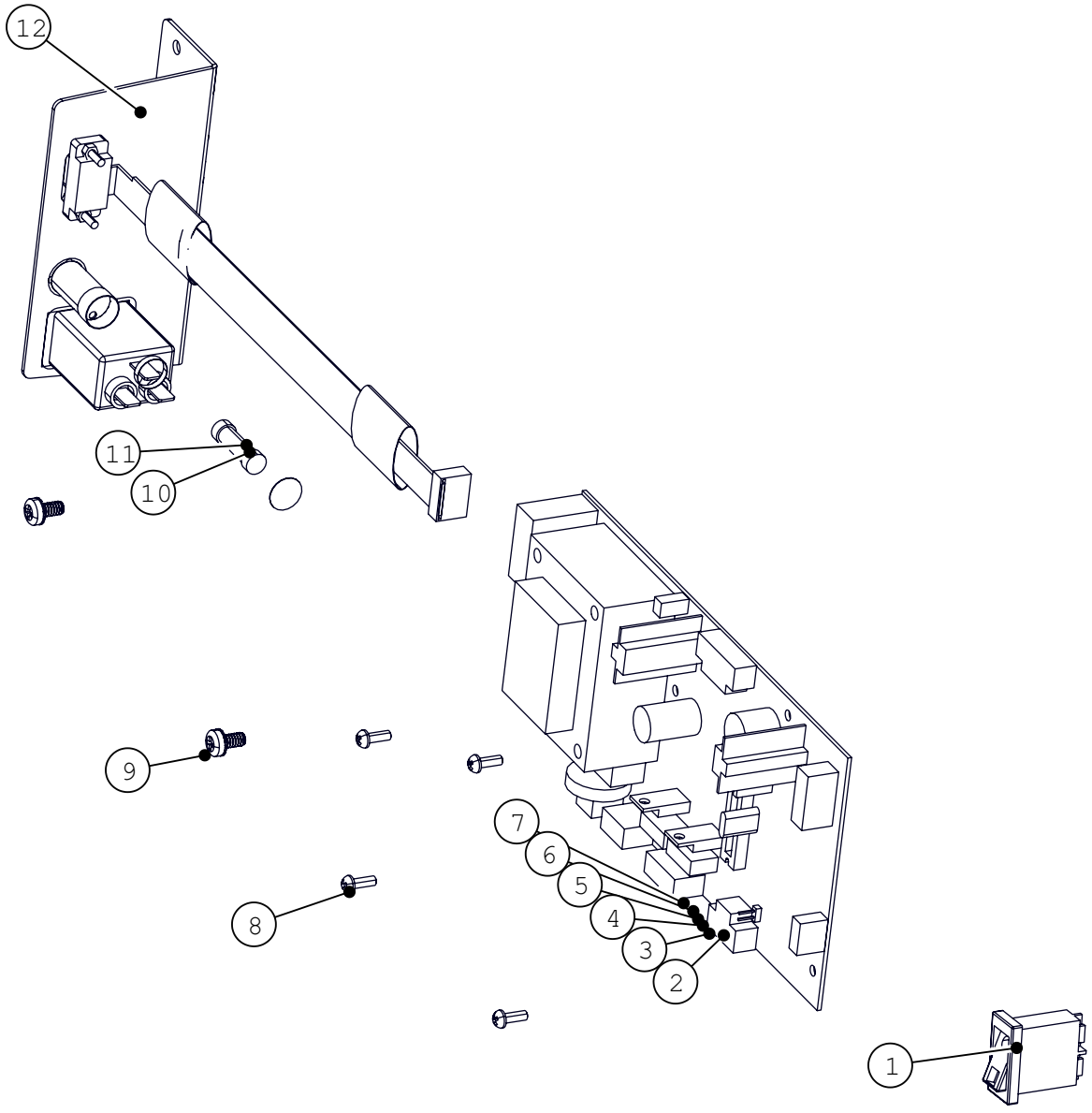

ITEM	DESCRIPTION	PART NUMBER	QTY
1	SWITCH ASSY	E555-071-01	1
2	eSA MAIN BOARD	E555-001-01	1
3	eLA MAIN BOARD	E555-001-02	1
4	eL MAIN BOARD	E555-002-02	1
5	eS MAIN BOARD	E555-002-01	1
6	eJA MAIN BOARD	E555-001-03	1
7	eFA/eMA MAIN BOARD	E555-001-06	1

ITEM	DESCRIPTION	PART NUMBER	QTY
8	SCREW, #6-32 3/8"	K-205	4
9	SCREW, #10-24 X 3/8	ST-1949	2
10	FUSE, 4A,5MM X 20MM	ST-2341K	1
11	FUSE, 2A,5MMX20MM	ST-2490	1
12	CONNECTOR PLATE ASSY.	E555-023-01	1

Drive Assembly

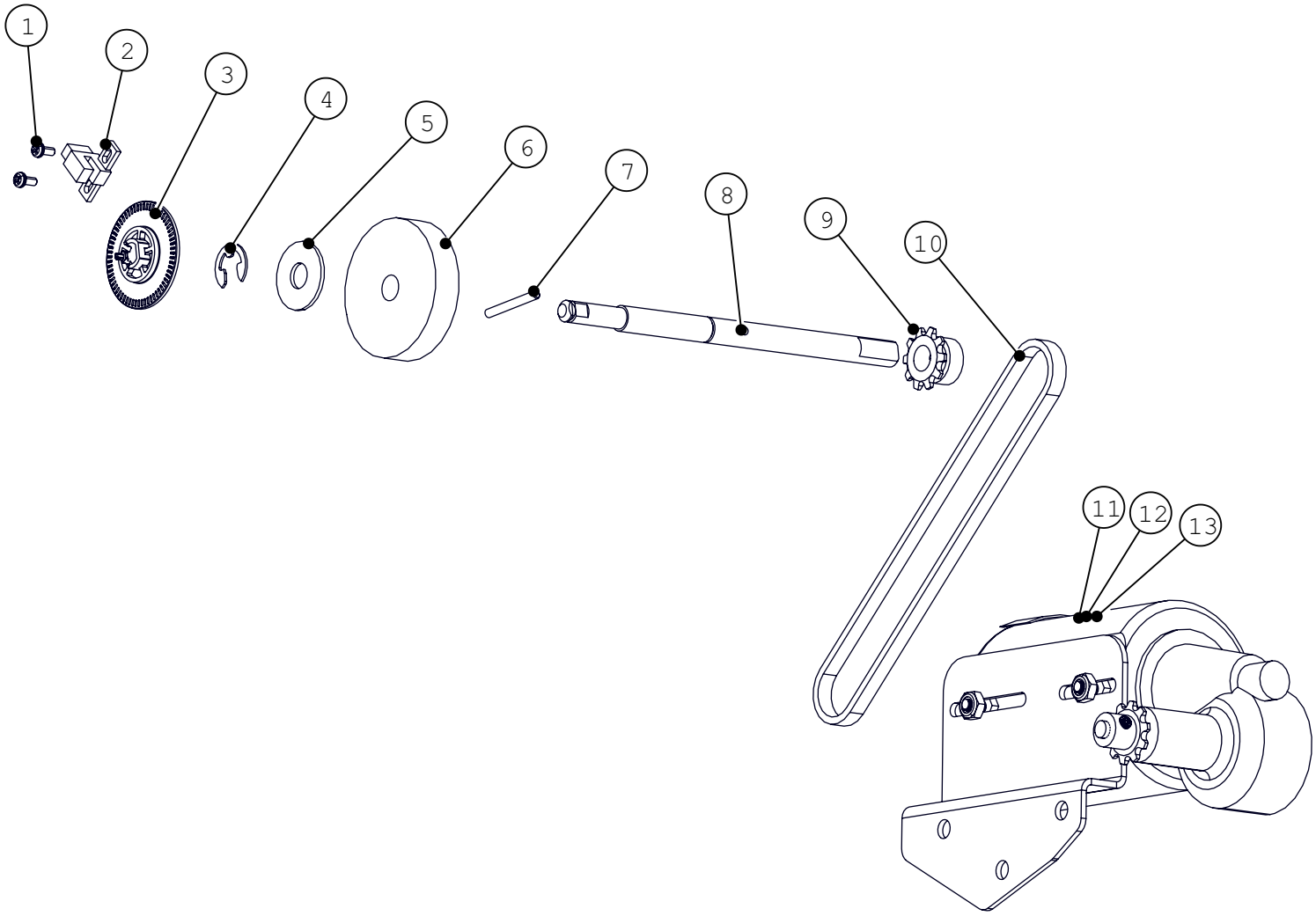

ITEM	DESCRIPTION	PART NUMBER	QTY
1	SCREW #4-40 X .25”	ST-2440	2
2	LENGTH SENSOR ASSY	E555-068-01	1
3	ENCODER WHEEL	E555-039-02	1
4	E-RING	FM-101-A	1
5	WASHER,FENDER-FLAT	ST-2528	1
6	FEED WHEEL	E555-039-06	1
7	FEED WHEEL PIN	EA46P	1

ITEM	DESCRIPTION	PART NUMBER	QTY
8	SHAFT, TAPE DRIVE	e555-024-00	1
9	SPROCKET, FEED SHAFT	ND-114-A	1
10	MOTOR CHAIN, LOOP 13-3/4"	ND-116	1
11	eSA/eLA/eL/eS MOTOR	E555-044-01	1
12	eFA/eMA MOTOR	E555-044-02	1
13	eJA MOTOR	E555-044-03	1

Appendix

Tape Path

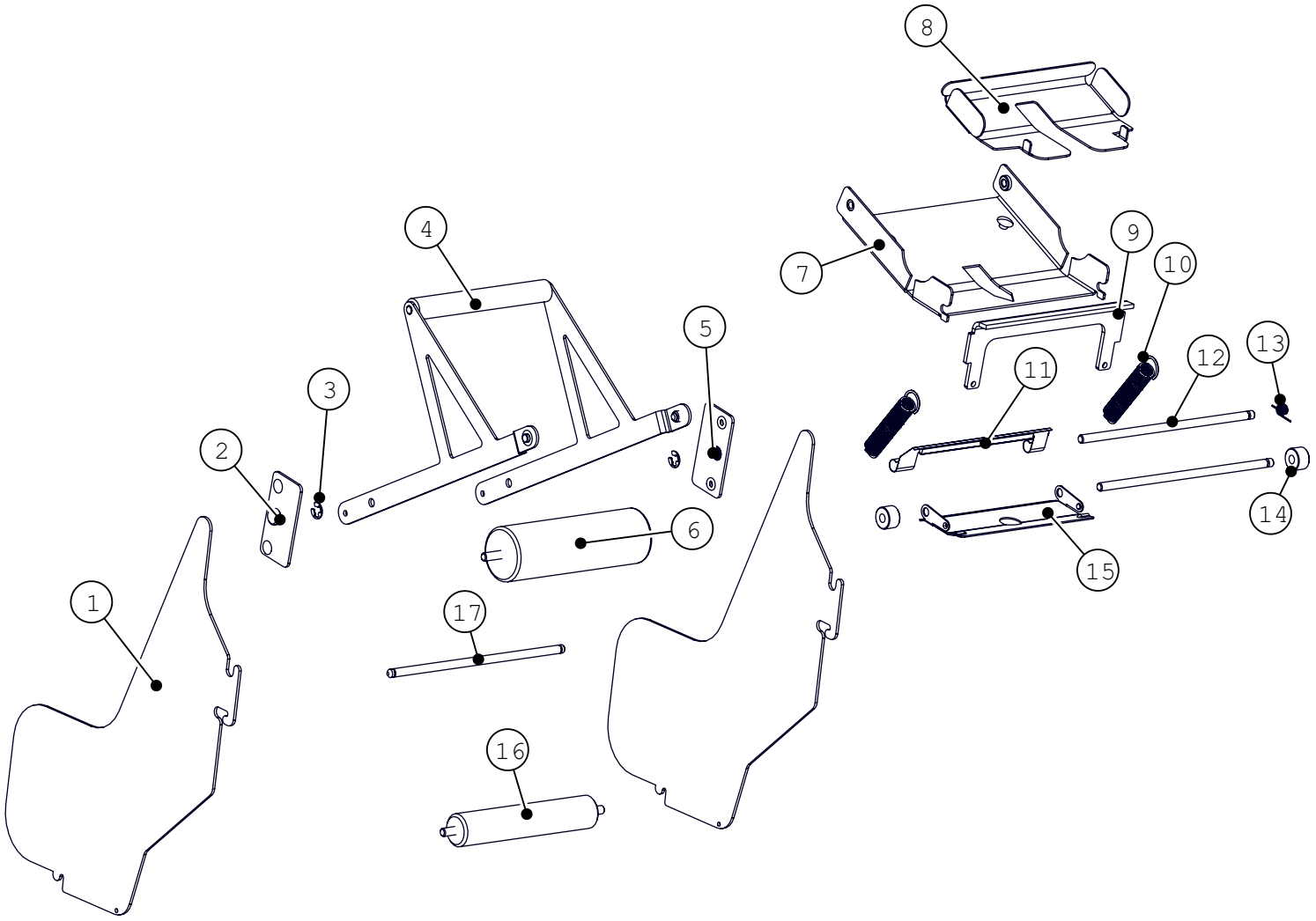

ITEM	DESCRIPTION	PART NUMBER	QTY
1	SIDE GUIDE	E555-064-00	2
2	PLATE, PIVOT SUPPORT	E555-058-01	1
3	RETAINING RING 3/16”	ST-2337	2
4	ASSY, LIFT ROLLER BRACKET	E555-098-01	1
5	PLATE, PIVOT SUPPORT	E555-058-01	1
6	ROLLER	E555-241-01	1
7	LOWER TAPE PLATE	E555-137-01	1
8	UPPER TAPE PLATE	E555-018-00	1
9	STATIONARY BLADE	FM-21	1

ITEM	DESCRIPTION	PART NUMBER	QTY
10	SHEAR TIP SPRING	FM-23-HD	2
11	FELT/BRACKET ASSY	SA-10X	1
12	PIVOT ROD	E-580-SA	2
13	TENSION SPRING	SA-13	1
14	SHEAR GUIDE ROLLER	FM-18	2
15	LOWER HEATER PLATE	E555-136-00	1
16	TAPE SUPPORT ROLLER	E555-051-01	1
17	REAR COVER PIVOT SHAFT	E555-060-00	1

Appendix

Solenoid and Cutting Assembly

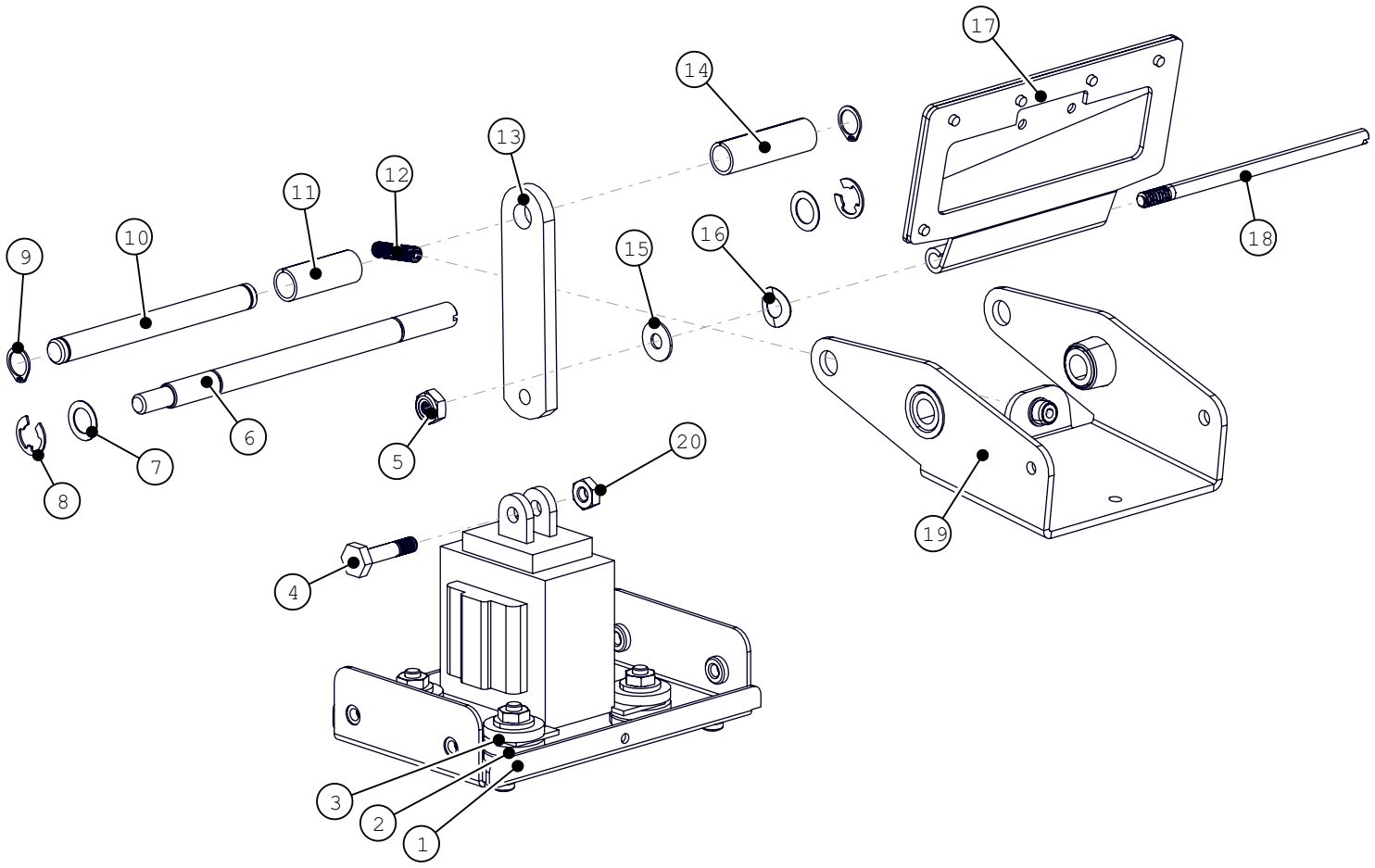

ITEM	DESCRIPTION	PART NUMBER	QTY
1	eS/eSA/eL/eLA SOLENOID SHELF ASSY	E555-048-01	1
2	eM/eMA/eFA SOLENOID SHELF ASSY	E555-048-02	1
3	eJ/eJA SOLENOID SHELF ASSY	E555-048-03	1
4	PLUNGER SCREW	E-718	1
5	NYLON -INSERT LOCKNUT	K-221B	1
6	SHAFT, CUTTER YOKE PIVOT	E555-052-00	1
7	FLAT WASHER, FLAT, .32 x 9/16 x 1/64 BRASS	SX-49-B	2
8	E CLIP	FM-94	2
9	RETAINING RING 5/16	WK2	2
10	LINK PIVOT SHAFT	E-623	1
11	LINK SPACER, LEFT	E-625	1

ITEM	DESCRIPTION	PART NUMBER	QTY
12	SOCKET SET SCREW	FM-73	1
13	SOLENOID LINK	E555-020-00	1
14	LINK SPACER, RIGHT	E-624	1
15	WASHER, WHEEL BUMPER BRACKET	FF-91	1
16	TENSION WASHER	PR-20	1
17	ASSY, CUTTER	E555-154-01	1
18	SHEAR PIN	FM25B	1
19	CUTTER YOKE ASSY	E555-015-01	1
20	NUT, BOOT	K221B	1

Idler Assembly

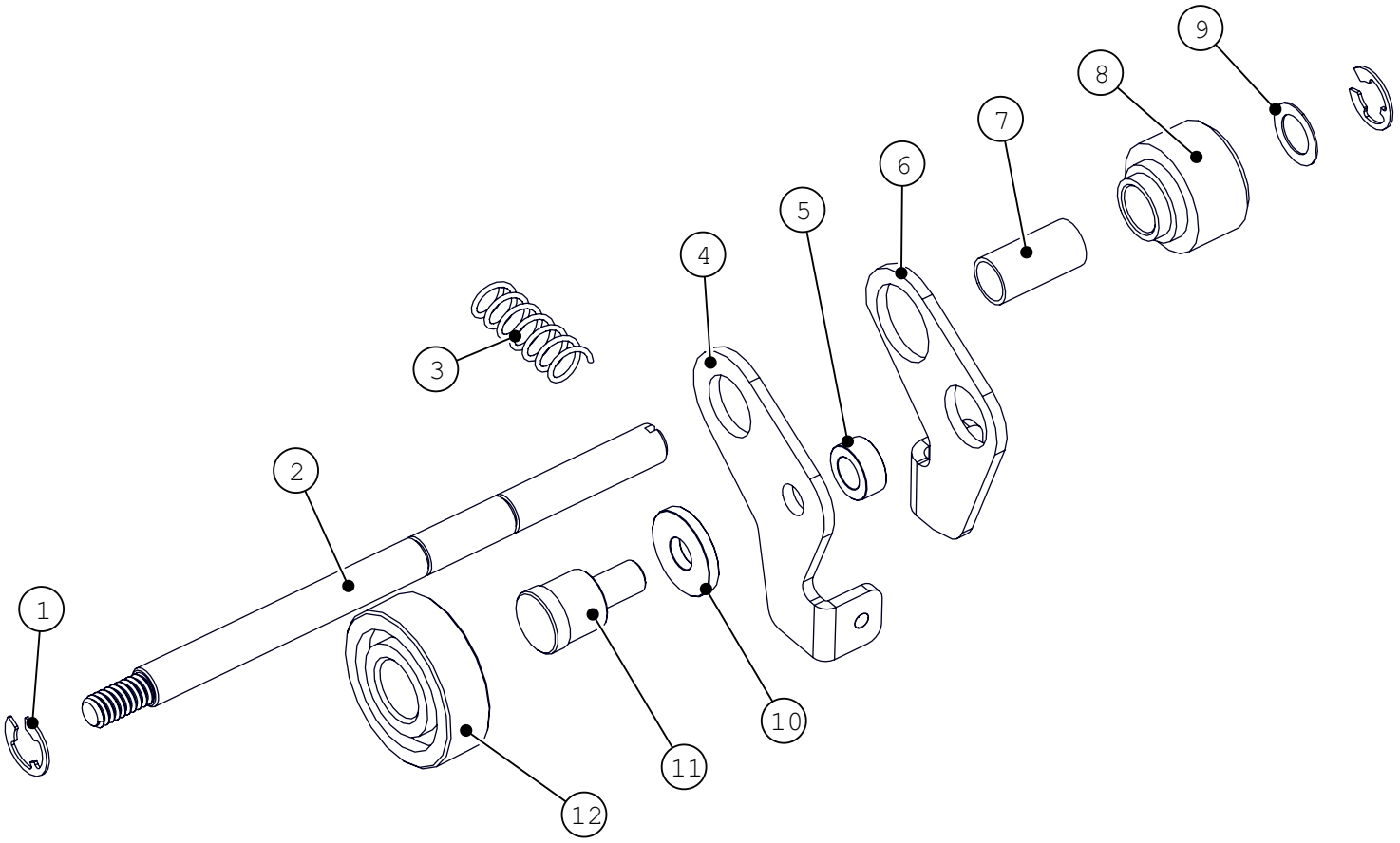

ITEM	DESCRIPTION	PART NUMBER	QTY
1	E CLIP	FM-94	2
2	PIVOT SHAFT, IDLER	E555-053-00	1
3	COMPRESSION SPRING	E-632	1
4	IDLER ARM	E-626	1
5	IDLER STOP BUSHING	E-631	1
6	IDLER ARM	E-628	1
7	BEARING, PLAIN .31 X .38 X .75	E555-180-00	1

ITEM	DESCRIPTION	PART NUMBER	QTY
8	IDLER HUB	E-627	1
9	FLAT WASHER	SX-49-B	1
10	IDLER WHEEL SPACER WASHER	FM-37	1
11	IDLER WHEEL STUD	E630X	1
12	ROLLER BEARING	E555-181-00	1

Appendix

Frames

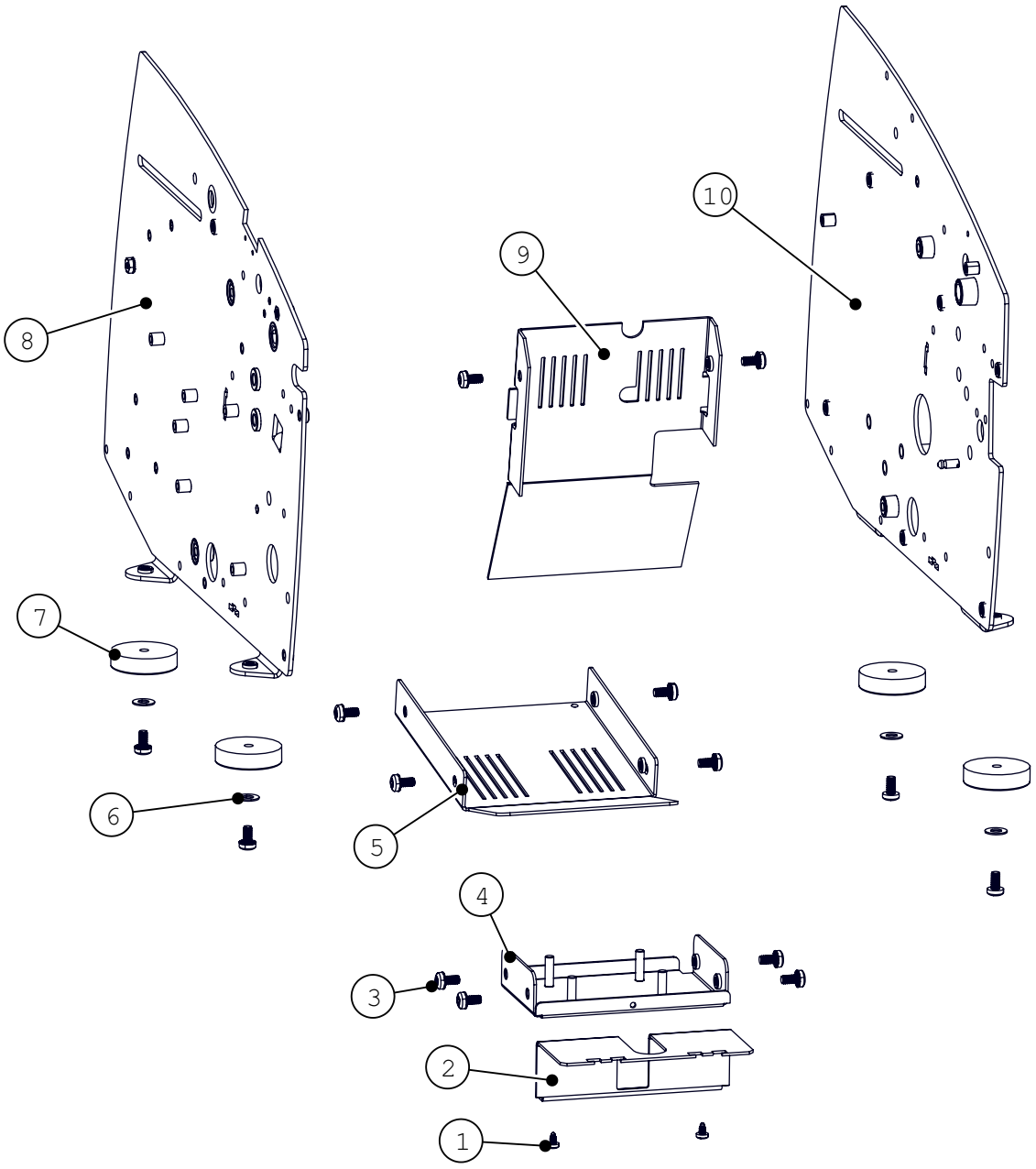

ITEM	DESCRIPTION	PART NUMBER	QTY
1	SCREW,#6x1/4"	ea70	2
2	ACCESS PLATE	E555-235-00	1
3	SCREW, #10-24 X 3/8"	E555-002-01	14
4	SOLENOID SHELF	E555-014-01	1
5	BASKET	E555-050-01	1
6	FLAT WASHER	bw1-4thin	4

ITEM	DESCRIPTION	PART NUMBER	QTY
7	FOOT, BP555	E555-054-00	4
8	LEFT FRAME ASSEMBLY	E555-010-01	1
9	VERTICAL TIE PLATE	E555-019-01	1
10	RIGHT FRAME ASSEMBLY	E555-011-01	1

Lift Cam Assembly

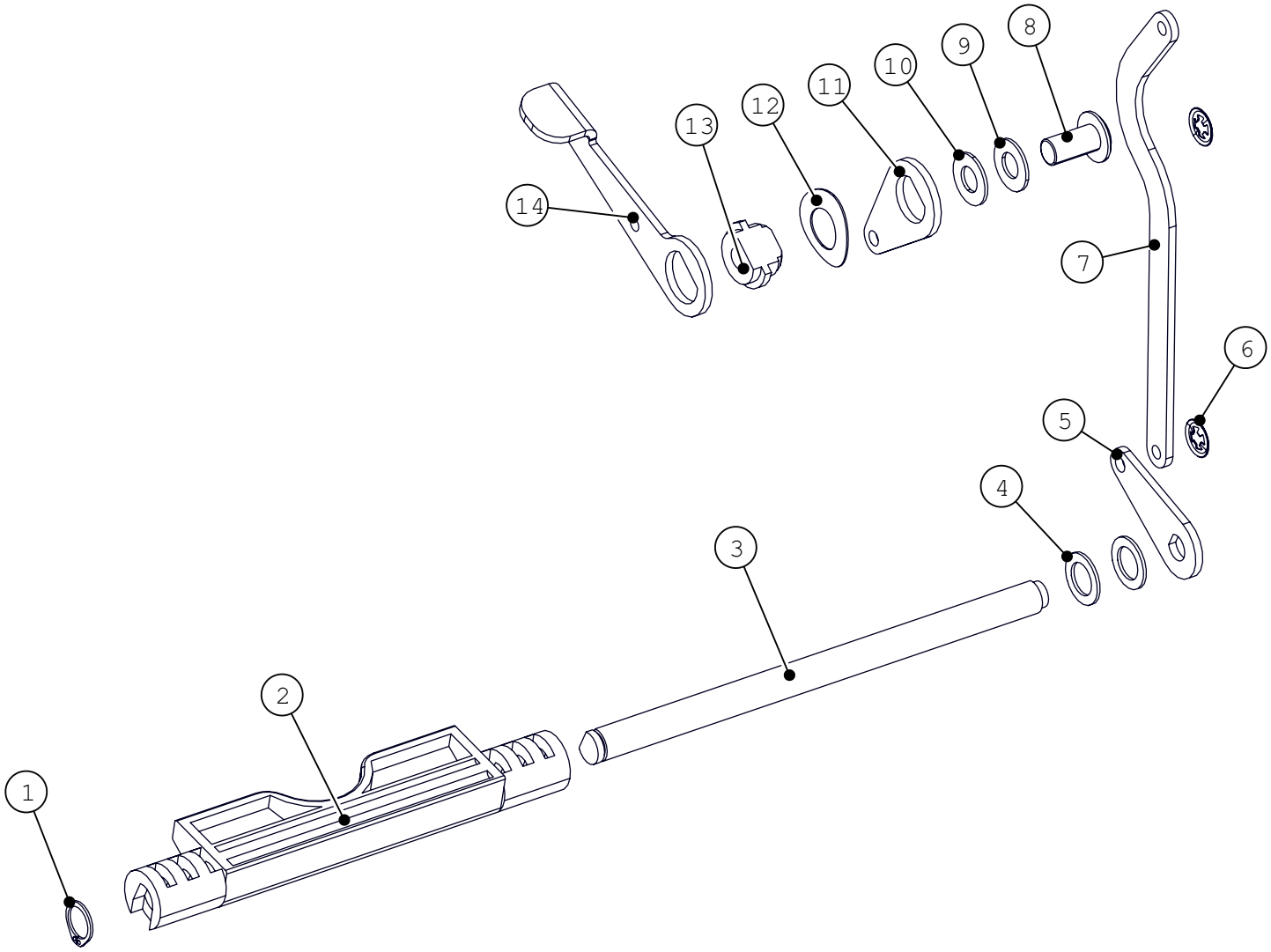

ITEM	DESCRIPTION	PART NUMBER	QTY
1	RETAINING RING 5/16	WK2	1
2	CAM, CUTTER LIFT	E555-077-00	1
3	SHAFT, CUTTER STOP-LIFT	E555-082-00	1
4	FLAT WASHER	SX-49-A	2
5	LINK, CUTTER LIFT CAM	E555-084-00	1
6	RETAINING RING, PUSH-ON, 1/8"	WK-20	2
7	LINK, CUTTER LIFT CAM	E555-078-00	1
8	SCREW, ¼-20 x ½"	TO-256	1

ITEM	DESCRIPTION	PART NUMBER	QTY
9	LOCKWASHER	1214	1
10	WASHER	BW1-4	1
11	LINK-CUTTER LIFT	E555-085-00	1
12	WAVE WASHER	ST-2895	1
13	SHAFT, CUTTER LIFT LEVER PIVOT	E555-080-00	1
14	CUTTER LIFT LEVER	E555-079-00	1

Part Replacement Kits

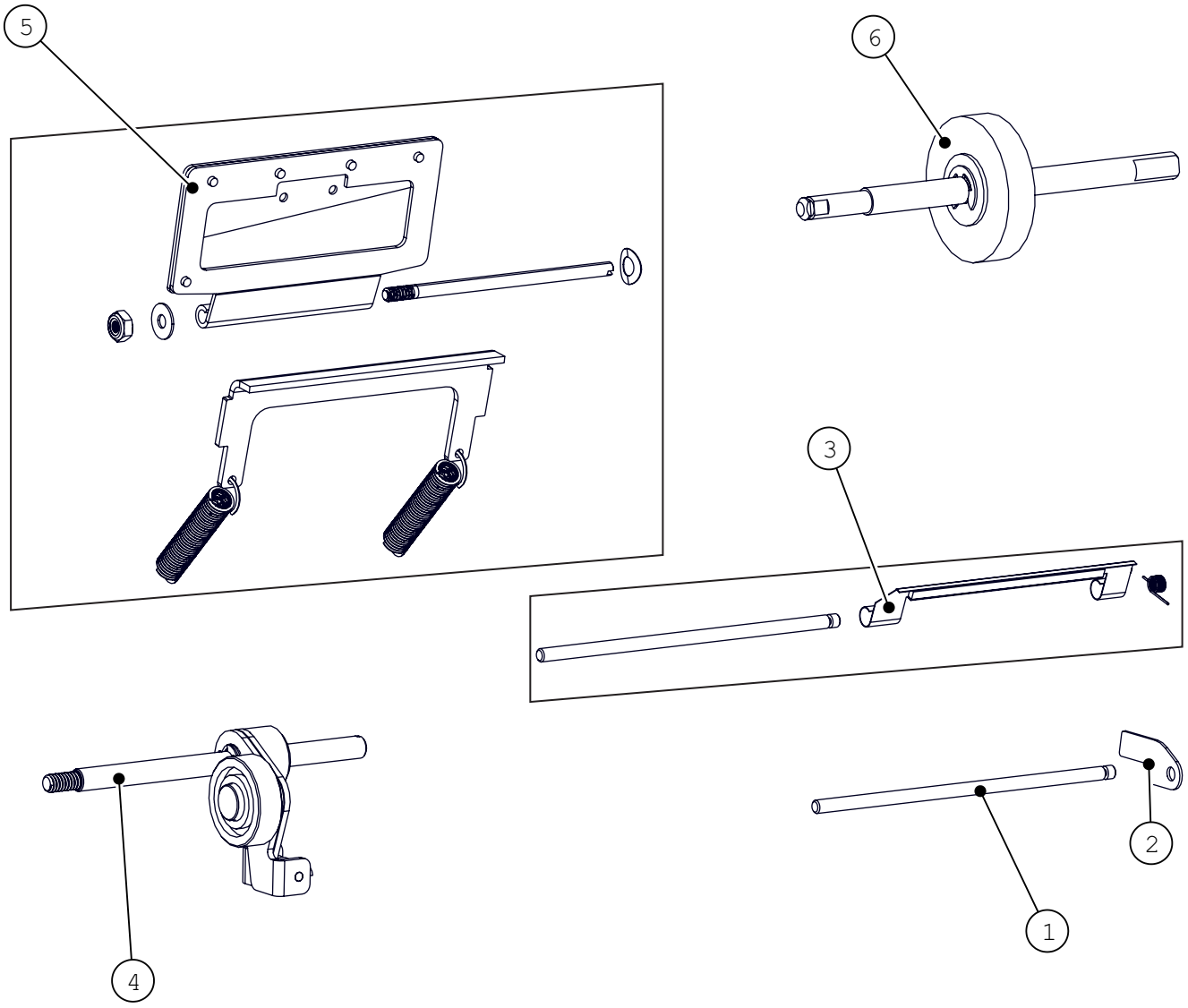

ITEM	DESCRIPTION	PART NUMBER	QTY
1	PIVOT ROD	E-580-SA	1
2	PIVOT ROD RETAINER	E-580-RA	1
3	FELT & BRACKET KIT	SA-10XXK	1
4	IDLER ASSY	E555-053-01	1

ITEM	DESCRIPTION	PART NUMBER	QTY
5	BLADE KIT	FM-20BX-K	1
6	ASSY, FEED WHEEL	E555-024-01	1

