BETTER PACKAGES®

USER MANUAL
PACKER 3S

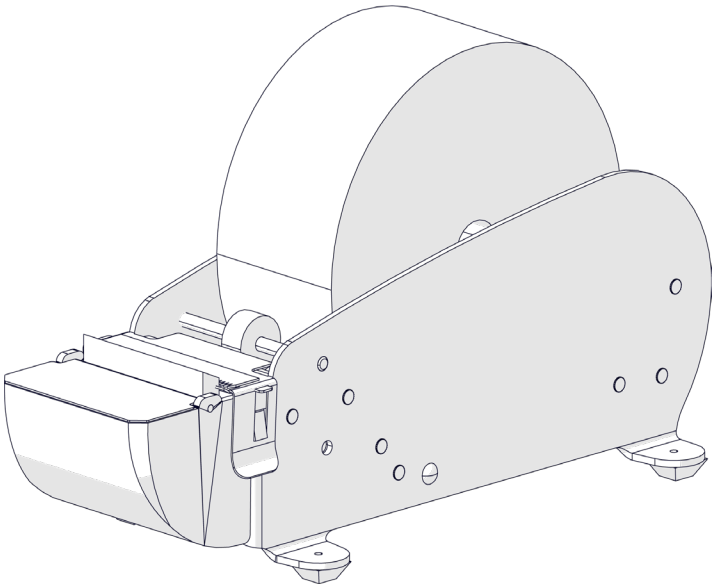

ipg®

BETTER PACKAGES®

OVER 100 YEARS OF EXCELLENCE

ipg est. 1917

BETTER PACKAGES®

REV5.0 11052026

Original Instructions

This manual was originally written in English. All translations are derived from the English version, which shall be considered the authoritative reference.

User Notes

For all IPG product manuals please visit www.itape.com/systems-manuals or use this QR code

Technical Assistance

This is the Better Packages Model **555e Series** WAT Tape Dispenser you ordered. It has been set up and tested in our factory with IPG manufactured water activated tapes. If any problems occur when setting up or operating this equipment, please contact the authorized distributor from where you purchased this item.

If contact with the authorized distributor is not possible, **IPG Machinery Support** is available. Should the need to contact **IPG Machinery Support** arise, **please have the equipment model and serial number available prior to contact.** This information can be found on the nameplate of the Dispenser. A section at the bottom of this page is available to write this information down. **IPG Machinery Support** is available during normal business hours (M-F 8am-7pm) Eastern Time.

Phone: +1 813-345-3070 Email: machsupp@itape.com

Replacement Parts

A breakdown of parts, including part numbers, can be provided upon request. If you know the part number that you require please contact your authorized distributor or Better Packages Customer Service 1-203-926-3700 or 1-800-237-9151 (United States only), parts can also be found directly at www.betterpackages.com/parts

Please use this area to enter the detailed information on your dispenser. This should be filled out at the time of install. This information can be found on the nameplate of the machine, next to the main power plug on the back of the dispenser.

Machine

Model

Serial

Distributor

Name

Phone/Email

Date of Purchase

Warranty Information

Better Packages® Products by Intertape Polymer Corp – Limited Warranty

Intertape Polymer Corp warrants each new Better Packages® product to be free from defects in materials and workmanship under normal and proper use conditions. The following warranty periods from date of purchase apply:

Model	Parts	Labor
Better Pack 755e Series	2 Years	6 Months
Better Pack 555e Series	2 Years	6 Months
Better Pack 500 Series	2 Years	6 Months
Better Pack 333 Series	2 Years	6 Months
Curby Mini Taper (BP222)	1 Year	6 Months
Packer 3S	2 Years	6 Months
Tape Shooter 404	2 Years	6 Months
Auto H2O Series	1 Year	6 Months

Wearable parts such as shear blades, water brushes, motor brushes, side guide plates and upper tape guide plates are not covered under the warranty. The following wearable parts are warranted for 3 months from date of purchase:

Main Board Solenoid Main Motor

Warranty Conditions and Exclusions

Machines and accessories used for any improper or unintended purpose will not be considered for warranty protection. Any modification of the machines or accessories shall make this warranty null and void. Use of replacement parts other than approved Better Packages® products shall also make this warranty null and void.

Intertape Polymer Corp shall have no obligation to repair or replace (1) those parts failing due to operator misuse, carelessness, or due to any accidental cause other than equipment failure, or (2) parts that fail due to:

Misapplication, lack of proper maintenance, abuse, improper installation, or abnormal conditions such as temperature, moisture, dirt, or corrosive matter, etc.

Inadequate cleaning, improper operating environment, improper utilities, or operator error.

Operations beyond the rated capacity of the product.

Alteration or servicing of the product by anyone other than an authorized representative of Intertape Polymer Corp

Any attempt by the purchaser to repair or correct alleged defective equipment. In this event the purchaser is responsible for all expenses incurred.

IN NO EVENT SHALL INTERTAPE POLYMER CORP. BE LIABLE FOR ANY INDIRECT, INCIDENTAL OR CONSEQUENTIAL DAMAGE FROM THE SALE OR USE OF THESE PRODUCTS. THIS DISCLAIMER APPLIES BOTH DURING AND AFTER THE TERM OF WARRANTY.

THIS WARRANTY IS EXPRESSLY IN LIEU OF ALL OTHER WARRANTIES, EXPRESS OR IMPLIED, INCLUDING THE WARRANTIES OF MERCHANTABILITY AND FITNESS FOR A PARTICULAR PURPOSE (EXCEPT AS MAY BE OTHERWISE PROVIDED BY LAW).

This warranty gives you specific legal rights, and you may also have other rights, which vary, from state to state.

Warranty Service

Intertape Polymer Corp will replace or repair (at the company's discretion) any defective parts within the warranty period, on a non-charge basis. The Authorized Distributor/Service Center will furnish, without charge, necessary labor to service the machine.

For service under this warranty, call or write Intertape Polymer Corp Distributor/Service Center Ansonia, CT at 800-237-9151 (US only) or (203) 926-3700. To locate your local Authorized Distributor/Service Center, visit www.betterpackages.com.

If customer wishes, with authorization from Intertape Polymer Corp or an Authorized Distributor/Service Center, a product may be shipped to Intertape Polymer Corp Ansonia, CT for warranty service. Any item shipped for warranty service must be shipped in the original factory carton and properly packed with the original protective packaging inserts or a secure carton that will properly protect the unit during transit. Any damage to machines or parts received improperly packed are the responsibility of the customer. All associated shipping or freight costs related to items shipped for service are the sole responsibility of the customer. Transportation charges on machines or parts returned to Intertape Polymer Corp Ansonia, CT for service must be prepaid by the customer. Customers will be responsible for freight expenses on parts or machines returned to them.

Intertape Polymer Corp - 4 Hershey Drive, Ansonia, Connecticut 06401.

Warranty Registration

Filling out the warranty card and returning it to us protects your warranty and allows us to keep you informed of product upgrades. Visit www.betterpackages.com/warranty-registration to fill out the warranty card online.

General Information

Description of the Packer 3S

The Packer 3S is a lightweight, portable manual water-activated tape dispenser designed for low-volume carton sealing applications. It accommodates reinforced and non-reinforced water-activated tape from 1 to 3 inches (25 to 76 mm) wide. Tape is manually pulled through the dispenser, where the adhesive is moistened, and then torn to the desired length using the integrated cutting mechanism.

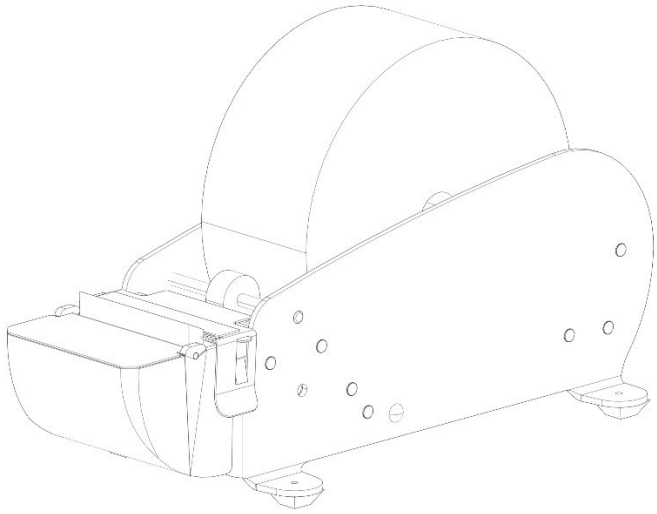

Figure 1 Packer 3S

Definitions

Common terms that will be used throughout this manual.

WAT – IPG Brand Water Activated Tape

User/Operator – The individual who has been trained on the daily use of the Packer 3S

Important Safeguards

Explanation of Signal Word Consequences

WARNING: INDICATES A POTENTIALLY HAZARDOUS SITUATION, WHICH IF NOT AVOIDED COULD RESULT IN DEATH OR SERIOUS INJURY OR PROPERTY DAMAGE

CAUTION: INDICATES A POTENTIALLY HAZARDOUS SITUATION, WHICH IF NOT AVOIDED COULD RESULT IN MINOR OR MODERATE INJURY OR PROPERTY DAMAGE

WARNING

1. To reduce the risk associated with sharp blades hazards:
   1.1. Keep hand and fingers away from the tape cutoff blades, the blades are very sharp
2. To reduce the risk associated with muscle strain:
   2.1. Use proper body mechanics when lifting or moving the Packer 3S
3. Personal Protective Equipment (PPE)
   3.1. Follow all PPE guidelines specific to the facility where the dispenser is located.

CAUTION: TO AVOID INJURY THE MACHINE OPERATOR SHOULD REMAIN ATTENTIVE AND SHOULD NEVER REST THEIR HANDS, ARMS, HEAD, OR ANY OTHER BODY PART ON THE MACHINE.

This equipment is not suitable for use in locations where children are likely to be present.

IPG manufactured WAT is nonhazardous with no need for first aid measures under recommended/normal use conditions. WAT adhesive can be cleaned with soap and water.

Installation Requirements

When the Packer 3S is being installed into facilities and pack stations the integrator and/or customer must:

- Verify the Packer 3S on a stable, level work surface capable of supporting the dispenser during normal operation.
- Verify adequate space for the Packer 3S, which measures approximately 14.5” × 6” × 6”. (268 × 153 × 153 mm).

Intended Use

1. The Packer 3S water-activated tape dispenser is designed and intended exclusively for the dispensing, cutting, and moistening of compatible water-activated tape for use in sealing corrugated cartons and similar packaging.
2. The equipment is intended for use by trained personnel in commercial and industrial packaging environments and shall be installed, operated, and maintained in accordance with the instructions and limitations specified in this manual.
3. Any use outside the specified application, operating conditions, or equipment limitations is considered outside the intended use of the dispenser.

Foreseeable Misuse

The following application or acts are not suitable for the tape head and constitute improper use.

1. Do not operate the dispenser without proper training.
2. Do not use the dispenser for purposes other than dispensing, cutting, and moistening water-activated tape.
3. Do not use tape types, widths, or roll sizes that are not specified for use with the dispenser.
4. Do not operate the dispenser with covers, guards, or safety-related components removed or improperly installed.
5. Do not bypass, disable, modify, or defeat any safety device or protective feature.
6. Do not place hands or fingers near the cutting blade or moving components.

7. Do not operate the dispenser in a flammable or explosive environment.
8. Do not use flammable cleaners, spray lubricants, or other unsuitable substances on or inside the dispenser.
9. Do not use the dispenser as a work surface, shelf, step, seat, or support.
10. Do not place tools, objects, or materials inside the dispenser that are not required for its intended operation.
11. Do not operate the dispenser on an unstable or unsuitable work surface.
12. Do not modify the dispenser or install unauthorized components or accessories that could affect safe operation.
13. Do not allow children or untrained personnel to operate the dispenser.

Disclaimer

The Packer 3S is intended to manually dispense, cut, and moisten water-activated tape for the manual sealing of corrugated cartons and similar packaging applications.

IPG and its authorized representatives are not responsible for accidents, injuries, equipment damage, or other damages resulting from:

1. Failure to follow the instructions, warnings, and safety information provided in this manual.
2. Use of the dispenser for any purpose other than its intended use.
3. Use of components, accessories, replacement parts, or adapters not supplied or approved by IPG or an authorized representative.
4. Repairs, adjustments, or modifications performed by anyone other than an IPG Authorized representative or qualified service technician, where authorization is required.
5. Unauthorized modification or alteration of the dispenser, its components, or safety devices.
6. Removal, bypassing, disabling, or modification of guards, covers, interlocks, or other safety-related components.
7. Operation outside the environmental, or operating conditions specified in this manual.
8. Improper installation, operation, maintenance, or servicing of the dispenser.

Long Term Storage

It is recommended to keep the original carton and shipping materials for proper long term storage.

Storage Conditions:

1. Store the dispenser indoors in a clean, dry environment.
2. Remove all water-activated tape from the dispenser.
3. Completely drain the water tank.
4. Clean and thoroughly dry the water tank, and brushes before storage.
5. Protect the dispenser from moisture, condensation, dust, corrosive materials, direct sunlight, and extreme temperatures.
6. Store the dispenser in an upright position on a stable surface.
7. When possible, store the dispenser in its original packaging or cover it to prevent dust and debris accumulation.
8. Before returning the dispenser to service, inspect it for damage, moisture, corrosion, or deterioration resulting from storage.

Operator Skill Level Descriptions

These descriptions and levels are uniform across all Better Packages Branded WAT Dispensers that are manufactured by Intertape Polymer Corp.

Skill "A" Dispenser Operator

The operator is trained to use the Dispenser with the machine controls, to change tape, and to clear jams and perform basic troubleshooting.

Important: The end user area supervisor must ensure that the operator has been properly trained on all machine functions before operating the machine.

Skill "B" Mechanical Maintenance Technician

Also referred to as the Maintenance Champion, this technician, is trained to use the Dispenser as the Operator and to check and adjust mechanical components, to perform maintenance operations and repair the Dispenser. A skill "B" operator is not allowed to work on live electrical components.

Skill "C" Factory Trained Technician

A Skill "C" technician is trained by IPG and may perform extraordinary maintenance. This includes electrical components.

Operator skill level required to perform the following tasks on the Packer 3S

Operation	Machine Condition	Operator Skill Level	Number of Operators
Tape roll replacement	N/A	A	1
Blade Replacement	N/A	A	1
Ordinary Maintenance and Preventative Maintenance	N/A	A	1

Intertape Polymer Corp offers a mail in factory maintenance program on Better Packages branded dispensers. Contact your Authorized IPG Representative for more information.

Specifications

Packer 3S Dimensions

Dispenser Weight: 6.5 lbs (3 kg)

Maximum tape roll diameter: 7.5 in (190mm)

Maximum tape roll length: up to 600 ft (183m)*

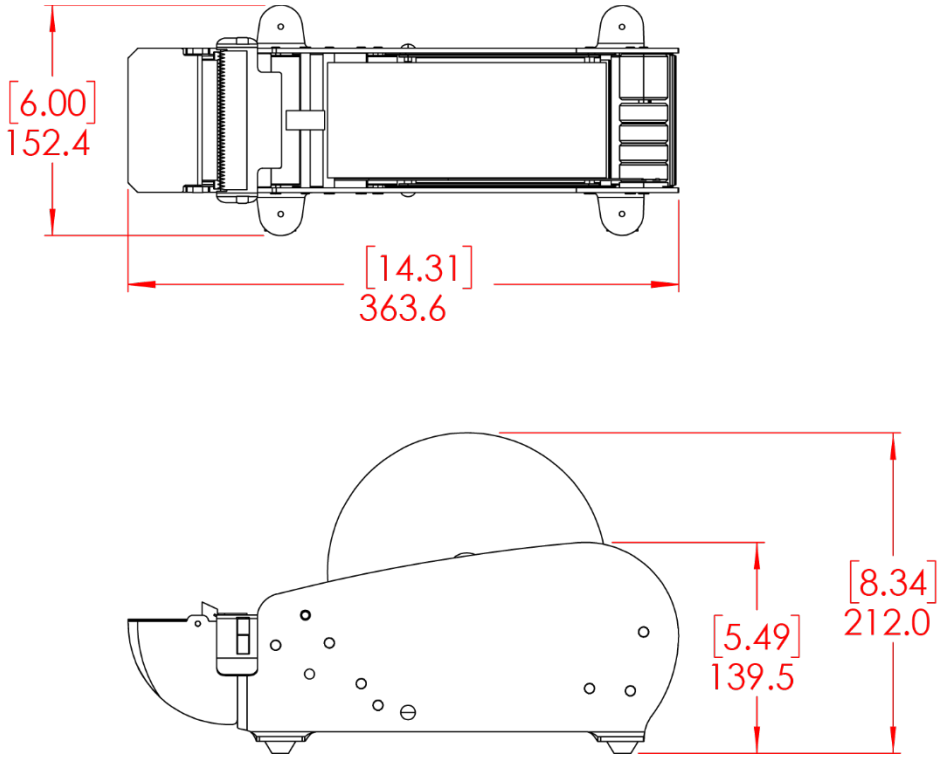

Figure 2 Dispenser Dimensions

*Tape length is determined by tape grade. Higher grades will be thicker and result in shorter lengths for the maximum tape roll length.

Dispenser Components

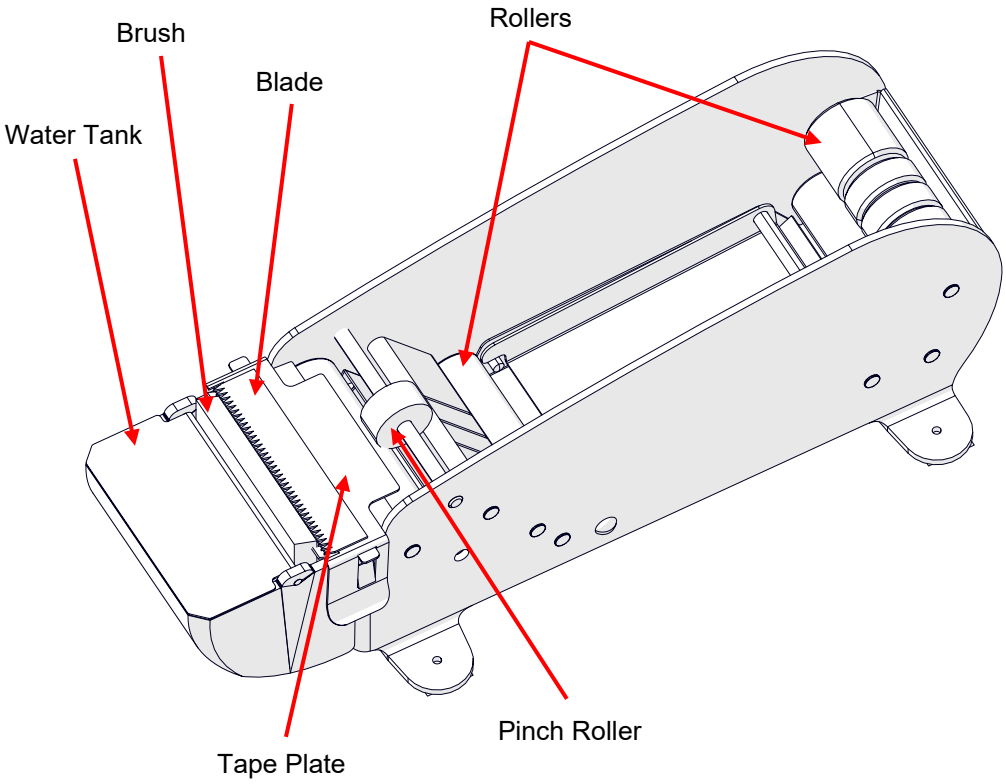

Figure 3 Packer 3S Components

Specifications

Operating Conditions

Use in a dry, relatively clean environment at 40º to 105º F (5º to 40º C). Humidity not to exceed 90% at a temperature of 68º F (20º C).

Tape Requirements

Use only IPG Brand Water Activated Tape

Maximum tape roll diameter of 7.5 in (190mm) with a maximum tape roll length of up to 600 ft (183m)

Technical Specifications

This is a manual dispenser with no power requirements.

Water tank Capacity

Maximum water volume capacity: 9 fl oz (270mL)

Optimal water volume: 5.5 fl oz (160 mL)

No special water is needed. If your water source is hard or contains a larger amount of minerals than average you may want to consider using filtered water.

Unpacking

After opening the top flaps of the carton, you will find instructions for properly removing the dispenser.

Verifying the Contents

Once the dispenser has been removed from the carton verify all the contents.

1. Water tank (Preinstalled) SP-21AX
2. Brush (Preinstalled) P-11
3. Knife Assembly (Preinstalled) SP-24X

Adjusting the Roll Guide

The roll guide is held in position with a slot on one side that fits into the rear roller. The front is curved and will sit into the slots on the front of the tape basket.

For a single standard roll of tape this can be removed or set all the way to one side. Lift forward end of tape divider plate from slot and the rear portion of the dispenser and place in the desired slot.

For multiple thin rolls of water activated tape: Lift forward end of tape divider plate from slot and the rear portion of the dispenser and place in the desired slots that correspond with the width of your two rolls of tape. Combination of widths: 2” (50mm), 1 ½” (38.1mm), and 1” (25.4mm).

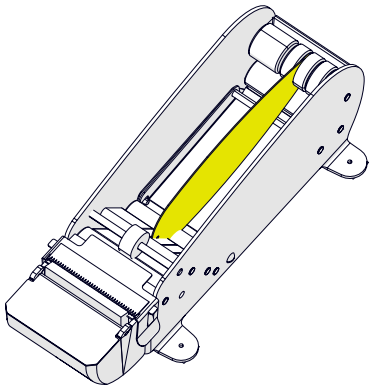

Figure 4 Tape roll divider

Loading Tape

Gum Side In

1. Peel off the tape.
2. Unroll 15 inches of tape.
3. Place tape in tape cradle and be sure tape divider is in proper position to fit width of tape.
   3.1. Be sure the tape when peeled off would come over the top of the tape roll towards the front of the dispenser.
4. Insert tape-end in back of two rollers.
5. Push the tape through the underside of the dispenser until the end comes out in front of the tape cradle
6. Thread the tape-end between the knife and bridge plate and out over the brush.

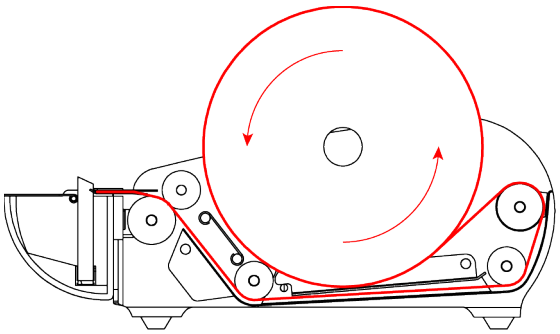

Figure 5 Gum side in tape path

Gum Side Out

1. Peel off the tape.
2. Unroll 15 inches of tape.
3. Place tape in tape cradle and be sure tape divider is in proper position to fit width of tape.
   3.1. Be sure the tape when peeled off would come over the top of the tape roll toward the rear of the dispenser.
4. Insert tape-end in back of two rollers.
5. Push the tape through the underside of the dispenser until the end comes out in front of the tape cradle
6. Thread the tape-end between the knife and bridge plate and out over the brush.

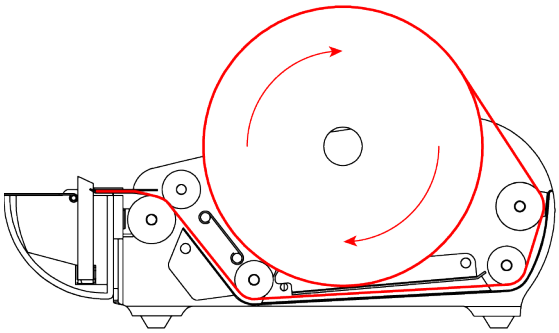

Figure 6 Gum side out tape path

Installing the Brush and Filling the Tank With Water

Removing and Installing the Brush

CAUTION: BLADE IS SHARP. USE CUT RESISTANT GLOVES WHEN HANDLING THE BLADE.

1. Lift the two tabs of the Blade Assembly
2. Remove the Blade Assembly
3. Brush
   3.1. To remove the brush simply lift the brush up and out of the tank
   3.2. To install the brush drop the base into the cavity. Be sure the cut of the brush is angled away from the center of the dispenser.
4. Press the Blade Assembly back onto the body of the Packer 3S until it snaps into position.

Filling the Tank with Water

The tank can accommodate a maximum of 9 oz of water. No special water is needed. If your water source is hard or contains a larger amount of minerals than average you may want to consider using filtered water.

1. Lift the lid of the tank.
2. Fill the tank roughly 2/3 with water. This is the optimal water level 5.5 fl oz (160 mL) and will allow the Packer 3S to wet out the tape while not being too full to splash out.

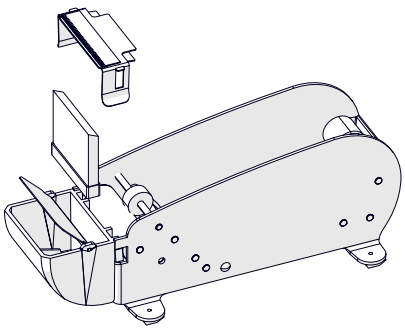

Figure 7 Brush Installation & Water Filling

Operation

The Packer 3S is manual tape dispenser and requires the operator to pull the tape by hand.

1. Pull a short length of tape out pressing it against the wet brush.
2. As you pull the length of the tape be sure it is at a slight decline angle. Do this for the length of tape that you need.
3. With the tape taught pull it quickly against the blade to tear the tape at the desired length.

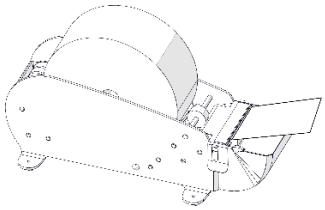

Figure 8 Pull Short Length

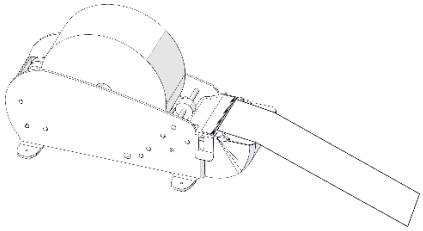

Figure 9 Apply proper wet-out

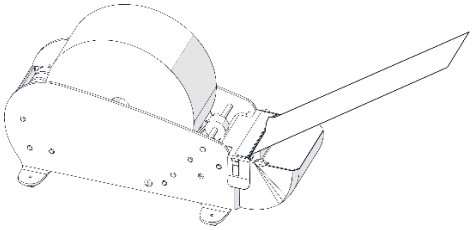

Figure 10 Cut Length

Choosing the Correct Tape Type

TYPE	CHARACTERISTIC
Paper Tape or Kraft Paper Tape	Made from paper only, with no additional reinforcing material
Reinforced Tape or Reinforced Paper Tape	Made from paper and contains additional strands of reinforcing material, typically fiberglass

IPG offers a variety of different grades of Paper Tape or Kraft Paper Tape. In most circumstances this non-reinforced tape is good for smaller and lighter cartons.

IPG offers a variety of different grades of Reinforced Tape or Reinforced Paper Tape. In most circumstances this reinforced tape is good for larger boxes and those with increased weight.

Contact your Authorized IPG Representative for the best tape for your applications.

Choosing the Correct Tape Length

In most situations it is recommended to dispense a length of tape that is equal to the length of seam on the carton with an additional 4-6 inches (101-152mm) to allow for tape legs on either end of the carton.

In the event the carton is extremely long an additional 6-8 inches (101-203mm) is recommended for tape legs.

In the event the carton is short an additional 3-4 inches (76-101mm) is may be used.

Proper Tape Moistening

Dispense a piece of tape and examine the adhesive surface. The tape should:

- Be evenly wet
- Have no dry spots
- Have no spots where water is running off the surface.

Rub the wet adhesive with your finger.

- The adhesive should have an “oily” feel and consistency.
- You should be able to move the adhesive underneath your finger.

When you rub two wet adhesive surfaces of the tape together against each other, you should see “strings” of adhesive

stretching between the two surfaces as you pull them apart, looking much like taffy as it is pulled.

If the tape is too wet or watery, it:

- Will not set fast enough
- May slip slightly over the surface of the carton, causing a “loose” seal

If the tape is not wet enough, it:

- May be tacky or sticky like pressure sensitive tape, but not “oily” like properly moistened tape.
- Is too dry to properly activate the adhesive which will prevent a permanent bond from forming (because the adhesive cannot penetrate the corrugate fibers).
- May too easily pull off the carton during handling and transportation.

Applying Tape to a Carton

The best way to apply the tape to the carton is:

1. Place the wet tape on the end of one of the flaps to be sealed so that:
   - Half of the tape’s width is on one flap
   - The other half is overhanging
2. Fold the flap without the tape down to its closed position.
3. Fold the other carton flap (the one with the overhanging tape) down into its proper closed position so that the overhanging portion of the tape is now in contact with the other flap on the opposite side of the carton.
4. Starting from the middle of the carton, apply a light downward pressure and wipe your hands over the tape on top of the carton flaps. Move from the center to the sides and then down over the overlapping ends in the sides of the carton. Sometimes wiping the tape down a second time before releasing the carton is helpful

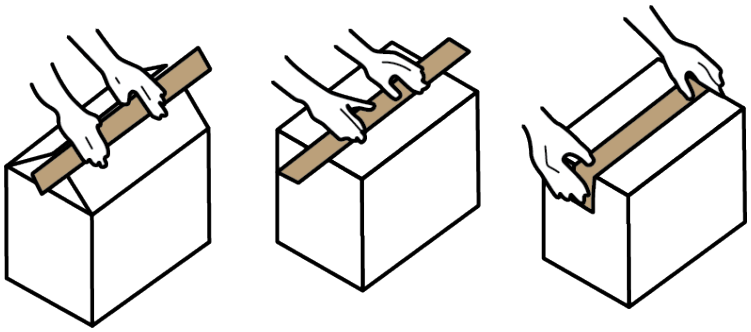

Figure 11 Applying Tape

Preventative Maintenance

Suggested Preventative Maintenance Schedule

Weekly

- Wash brushes with mild soap and water. Rinse well to remove all soap residue.
- Clean any accumulated dust with a dry brush or blower.
- Wash water tank with mild soap and water. Rinse well to remove all soap residue.

Monthly

- Clean accumulated glue from blades using a scraper. Do not scrape the cutting edge of the blade this can cause damage and may result in needing to change the blade.
- Apply a light coating of a light machine oil to the back of the blade.
- Add only a few drop of a light machine oil to felt pads.

Annually

- Thoroughly clean all accumulated pieces of tape, dust, and any other foreign material from inside the Dispenser with a dry brush or blower.
- Clean the bottom of heaters and pressure plates of accumulated tape adhesive.
- Clean all covers with a damp rag.

Washing the Tank and Brush

Water Brush: Glue from the tape may accumulate and reduce the effectiveness of the moistening system. Wash brushes weekly with mild soap. Be sure to agitate the bristles while in the soap and water solution. A brush is considered clean after this agitation and all adhesive build up has been removed.

It is recommended to soak brushes in a solution of mild soap and water overnight. This will reduce any adhesive build up and extend the life of the brushes.

If you operate multiple machines all brushes may soak in the same container.

Rinse the brushes in running warm water before reinstalling them into a clean water tank.

Water Tank: Glue from the tape may accumulate in the water tank. This build up can accumulate in the water brushes and result in a reduction of water transmission to the tape and a weaker bond to the carton.

It is recommended to wash the water tank once a week in a warm soap and water solution. Use a low-scratch abrasive brush to clean the bottom of the water tank as well as the tight areas. Rinse the water tank in running warm water before reinstalling.

Support Contact

If you are experiencing trouble with your Dispenser or it is functioning in a way that is not consistent with this manual please contact IPG Machinery Support at +1 813-345-3070 between the hours of 8am and 7pm Eastern Standard Time or via email at machsupp@itape.com

Decommissioning/Disposal

When the dispenser reaches the end of its service life or is being permanently removed from service:

1. Remove the roll of water-activated tape and any remaining tape from the tape path.
2. Remove and empty the water tank.
3. Clean and dry the water tank, brushes, and other areas containing water or adhesive residue.
4. Remove any accessories or externally connected devices.
5. Dispose of or recycle the dispenser and its components in accordance with applicable local regulations.

Separate metal, plastic, and other materials as required by applicable local regulations. Contact the appropriate local recycling or waste-management authority for disposal requirements.

Parts Diagram

