BETTER PACKAGES®

USER MANUAL
TAPESHOOTER 404

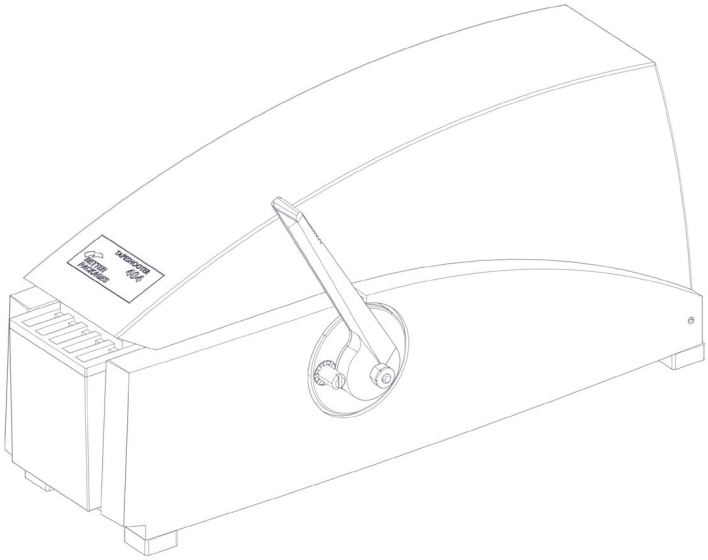

ipg®

BETTER PACKAGES®

OVER 100 YEARS OF EXCELLENCE est. 1917

REV5.0 11052026

Original Instructions

This manual was originally written in English. All translations are derived from the English version, which shall be considered the authoritative reference.

User Notes

For all IPG product manuals please visit www.itape.com/systems-manuals or use this QR code

Technical Assistance

This is the Better Packages Model **Tapeshooter 404** WAT Tape Dispenser you ordered. It has been set up and tested in our factory with IPG manufactured water activated tapes. If any problems occur when setting up or operating this equipment, please contact the authorized distributor from where you purchased this item.

If contact with the authorized distributor is not possible, **IPG Machinery Support** is available. Should the need to contact **IPG Machinery Support** arise, **please have the equipment model and serial number available prior to contact.** This information can be found on the nameplate of the Dispenser. A section at the bottom of this page is available to write this information down. **IPG Machinery Support** is available during normal business hours (M-F 8am-7pm) Eastern Time.

Phone: +1 813-345-3070 Email: machsupp@itape.com

Replacement Parts

A breakdown of parts, including part numbers, can be provided upon request. If you know the part number that you require please contact your authorized distributor or Better Packages Customer Service 1-203-926-3700 or 1-800-237-9151 (United States only), parts can also be found directly at www.betterpackages.com/parts

Please use this area to enter the detailed information on your dispenser. This should be filled out at the time of install. This information can be found on the nameplate of the machine, next to the main power plug on the back of the dispenser.

Machine

Model

Serial

Distributor

Name

Phone/Email

Date of Purchase

Warranty Information

Better Packages® Products by Intertape Polymer Corp – Limited Warranty

Intertape Polymer Corp warrants each new Better Packages® product to be free from defects in materials and workmanship under normal and proper use conditions. The following warranty periods from date of purchase apply:

Model	Parts	Labor
Better Pack 755e Series	2 Years	6 Months
Better Pack 555e Series	2 Years	6 Months
Better Pack 500 Series	2 Years	6 Months
Better Pack 333 Series	2 Years	6 Months
Curby Mini Taper (BP222)	1 Year	6 Months
Packer 3S	2 Years	6 Months
Tape Shooter 404	2 Years	6 Months
Auto H2O Series	1 Year	6 Months

Wearable parts such as shear blades, water brushes, motor brushes, side guide plates and upper tape guide plates are not covered under the warranty. The following wearable parts are warranted for 3 months from date of purchase:

Main Board Solenoid Main Motor

Warranty Conditions and Exclusions

Machines and accessories used for any improper or unintended purpose will not be considered for warranty protection. Any modification of the machines or accessories shall make this warranty null and void. Use of replacement parts other than approved Better Packages® products shall also make this warranty null and void.

Intertape Polymer Corp shall have no obligation to repair or replace (1) those parts failing due to operator misuse, carelessness, or due to any accidental cause other than equipment failure, or (2) parts that fail due to:

Misapplication, lack of proper maintenance, abuse, improper installation, or abnormal conditions such as temperature, moisture, dirt, or corrosive matter, etc.

Inadequate cleaning, improper operating environment, improper utilities, or operator error.

Operations beyond the rated capacity of the product.

Alteration or servicing of the product by anyone other than an authorized representative of Intertape Polymer Corp

Any attempt by the purchaser to repair or correct alleged defective equipment. In this event the purchaser is responsible for all expenses incurred.

IN NO EVENT SHALL INTERTAPE POLYMER CORP. BE LIABLE FOR ANY INDIRECT, INCIDENTAL OR CONSEQUENTIAL DAMAGE FROM THE SALE OR USE OF THESE PRODUCTS. THIS DISCLAIMER APPLIES BOTH DURING AND AFTER THE TERM OF WARRANTY.

THIS WARRANTY IS EXPRESSLY IN LIEU OF ALL OTHER WARRANTIES, EXPRESS OR IMPLIED, INCLUDING THE WARRANTIES OF MERCHANTABILITY AND FITNESS FOR A PARTICULAR PURPOSE (EXCEPT AS MAY BE OTHERWISE PROVIDED BY LAW).

This warranty gives you specific legal rights, and you may also have other rights, which vary, from state to state.

Warranty Service

Intertape Polymer Corp will replace or repair (at the company's discretion) any defective parts within the warranty period, on a non-charge basis. The Authorized Distributor/Service Center will furnish, without charge, necessary labor to service the machine.

For service under this warranty, call or write Intertape Polymer Corp Distributor/Service Center Ansonia, CT at 800-237-9151 (US only) or (203) 926-3700. To locate your local Authorized Distributor/Service Center, visit www.betterpackages.com.

If customer wishes, with authorization from Intertape Polymer Corp or an Authorized Distributor/Service Center, a product may be shipped to Intertape Polymer Corp Ansonia, CT for warranty service. Any item shipped for warranty service must be shipped in the original factory carton and properly packed with the original protective packaging inserts or a secure carton that will properly protect the unit during transit. Any damage to machines or parts received improperly packed are the responsibility of the customer. All associated shipping or freight costs related to items shipped for service are the sole responsibility of the customer. Transportation charges on machines or parts returned to Intertape Polymer Corp Ansonia, CT for service must be prepaid by the customer. Customers will be responsible for freight expenses on parts or machines returned to them.

Intertape Polymer Corp - 4 Hershey Drive, Ansonia, Connecticut 06401.

Warranty Registration

Filling out the warranty card and returning it to us protects your warranty and allows us to keep you informed of product upgrades. Visit www.betterpackages.com/warranty-registration to fill out the warranty card online.

General Information

Description of the Tapeshooter 404

The **Better Packages TapeShooter 404** is a manually operated water-activated tape dispenser designed for light-duty packaging applications. The dispenser features an adjustable tape-length mechanism, an integrated water reservoir and moistening brush, and a guillotine-style cutting blade. A single movement of the operating lever dispenses, moistens, and cuts the selected length of tape.

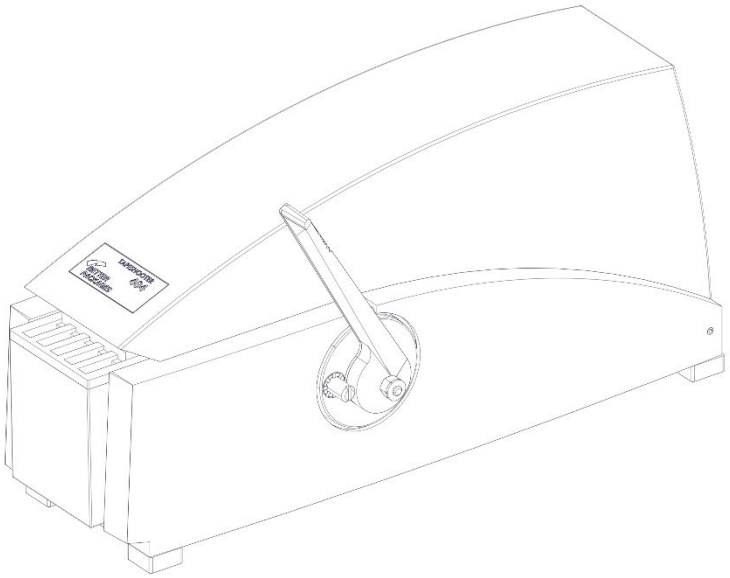

Figure 1 Tapeshooter 404

Definitions

Common terms that will be used throughout this manual.

WAT – IPG Brand Water Activated Tape

User/Operator – The individual who has been trained on the daily use of the Tapeshooter 404

Important Safeguards

Explanation of Signal Word Consequences

WARNING: INDICATES A POTENTIALLY HAZARDOUS SITUATION, WHICH IF NOT AVOIDED COULD RESULT IN DEATH OR SERIOUS INJURY OR PROPERTY DAMAGE

CAUTION: INDICATES A POTENTIALLY HAZARDOUS SITUATION, WHICH IF NOT AVOIDED COULD RESULT IN MINOR OR MODERATE INJURY OR PROPERTY DAMAGE

WARNING

1. To reduce the risk associated with sharp blades hazards:
   1.1. Keep hand and fingers away from the tape cutoff blades, the blades are very sharp
2. To reduce the risk associated with muscle strain:
   2.1. Use proper body mechanics when lifting or moving the Tapeshooter 404
3. Personal Protective Equipment (PPE)
   3.1. Follow all PPE guidelines specific to the facility where the dispenser is located.

CAUTION: TO AVOID INJURY THE MACHINE OPERATOR SHOULD REMAIN ATTENTIVE AND SHOULD NEVER REST THEIR HANDS, ARMS, HEAD, OR ANY OTHER BODY PART ON THE MACHINE.

This equipment is not suitable for use in locations where children are likely to be present.

IPG manufactured WAT is nonhazardous with no need for first aid measures under recommended/normal use conditions. WAT adhesive can be cleaned with soap and water.

Installation Requirements

When the Tapeshooter 404 is being installed into facilities and pack stations the integrator and/or customer must:

- Verify the Tapeshooter 404 on a stable, level work surface capable of supporting the dispenser during normal operation.
- Verify adequate space for the Tapeshooter 404, which measures approximately 14.5” × 6” × 6”. (268 × 153 × 153 mm).

Intended Use

1. The Tapeshooter 404 water-activated tape dispenser is designed and intended exclusively for the dispensing, cutting, and moistening of compatible water-activated tape for use in sealing corrugated cartons and similar packaging.
2. The equipment is intended for use by trained personnel in commercial and industrial packaging environments and shall be installed, operated, and maintained in accordance with the instructions and limitations specified in this manual.
3. Any use outside the specified application, operating conditions, or equipment limitations is considered outside the intended use of the dispenser.

Foreseeable Misuse

The following application or acts are not suitable for the tape head and constitute improper use.

1. Do not operate the dispenser without proper training.
2. Do not use the dispenser for purposes other than dispensing, cutting, and moistening water-activated tape.
3. Do not use tape types, widths, or roll sizes that are not specified for use with the dispenser.
4. Do not operate the dispenser with covers, guards, or safety-related components removed or improperly installed.
5. Do not bypass, disable, modify, or defeat any safety device or protective feature.

6. Do not place hands or fingers near the cutting blade or moving components.
7. Do not operate the dispenser in a flammable or explosive environment.
8. Do not use flammable cleaners, spray lubricants, or other unsuitable substances on or inside the dispenser.
9. Do not use the dispenser as a work surface, shelf, step, seat, or support.
10. Do not place tools, objects, or materials inside the dispenser that are not required for its intended operation.
11. Do not operate the dispenser on an unstable or unsuitable work surface.
12. Do not modify the dispenser or install unauthorized components or accessories that could affect safe operation.
13. Do not allow children or untrained personnel to operate the dispenser.

Disclaimer

The Tapeshooter 404 is intended to manually dispense, cut, and moisten water-activated tape for the manual sealing of corrugated cartons and similar packaging applications.

IPG and its authorized representatives are not responsible for accidents, injuries, equipment damage, or other damages resulting from:

1. Failure to follow the instructions, warnings, and safety information provided in this manual.
2. Use of the dispenser for any purpose other than its intended use.
3. Use of components, accessories, replacement parts, or adapters not supplied or approved by IPG or an authorized representative.
4. Repairs, adjustments, or modifications performed by anyone other than an IPG Authorized representative or qualified service technician, where authorization is required.
5. Unauthorized modification or alteration of the dispenser, its components, or safety devices.
6. Removal, bypassing, disabling, or modification of guards, covers, interlocks, or other safety-related components.
7. Operation outside the environmental, or operating conditions specified in this manual.
8. Improper installation, operation, maintenance, or servicing of the dispenser.

Long Term Storage

It is recommended to keep the original carton and shipping materials for proper long term storage.

Storage Conditions:

1. Store the dispenser indoors in a clean, dry environment.
2. Remove all water-activated tape from the dispenser.
3. Completely drain the water tank.
4. Clean and thoroughly dry the water tank, and brushes before storage.
5. Protect the dispenser from moisture, condensation, dust, corrosive materials, direct sunlight, and extreme temperatures.
6. Store the dispenser in an upright position on a stable surface.
7. When possible, store the dispenser in its original packaging or cover it to prevent dust and debris accumulation.
8. Before returning the dispenser to service, inspect it for damage, moisture, corrosion, or deterioration resulting from storage.

Operator Skill Level Descriptions

These descriptions and levels are uniform across all Better Packages Branded WAT Dispensers that are manufactured by Intertape Polymer Corp.

Skill "A" Dispenser Operator

The operator is trained to use the Dispenser with the machine controls, to change tape, and to clear jams and perform basic troubleshooting.

Important: The end user area supervisor must ensure that the operator has been properly trained on all machine functions before operating the machine.

Skill "B" Mechanical Maintenance Technician

Also referred to as the Maintenance Champion, this technician, is trained to use the Dispenser as the Operator and to check and adjust mechanical components, to perform maintenance operations and repair the Dispenser. A skill "B" operator is not allowed to work on live electrical components.

Skill "C" Factory Trained Technician

A Skill "C" technician is trained by IPG and may perform extraordinary maintenance. This includes electrical components.

Operator skill level required to perform the following tasks on the Tapeshooter 404

Operation	Machine Condition	Operator Skill Level	Number of Operators
Tape roll replacement	N/A	A	1
Blade Replacement	N/A	A	1
Ordinary Maintenance and Preventative Maintenance	N/A	A	1

Intertape Polymer Corp offers a mail in factory maintenance program on Better Packages branded dispensers. Contact your Authorized IPG Representative for more information.

Specifications

Tapeshooter 404 Dimensions

Dispenser Weight:7 lbs (3.2 kg)

Maximum tape roll diameter: 5 in (127mm)

Maximum tape roll length: up to 500 ft (152.4m)*

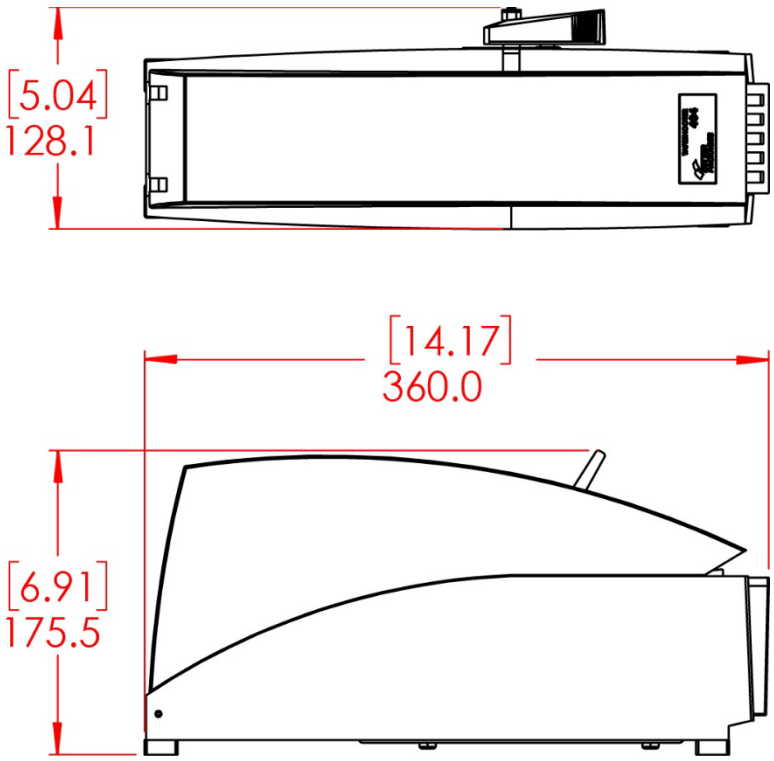

Figure 2 Dispenser Dimensions

*Tape length is determined by tape grade. Higher grades will be thicker and result in shorter lengths for the maximum tape roll length.

Dispenser Components

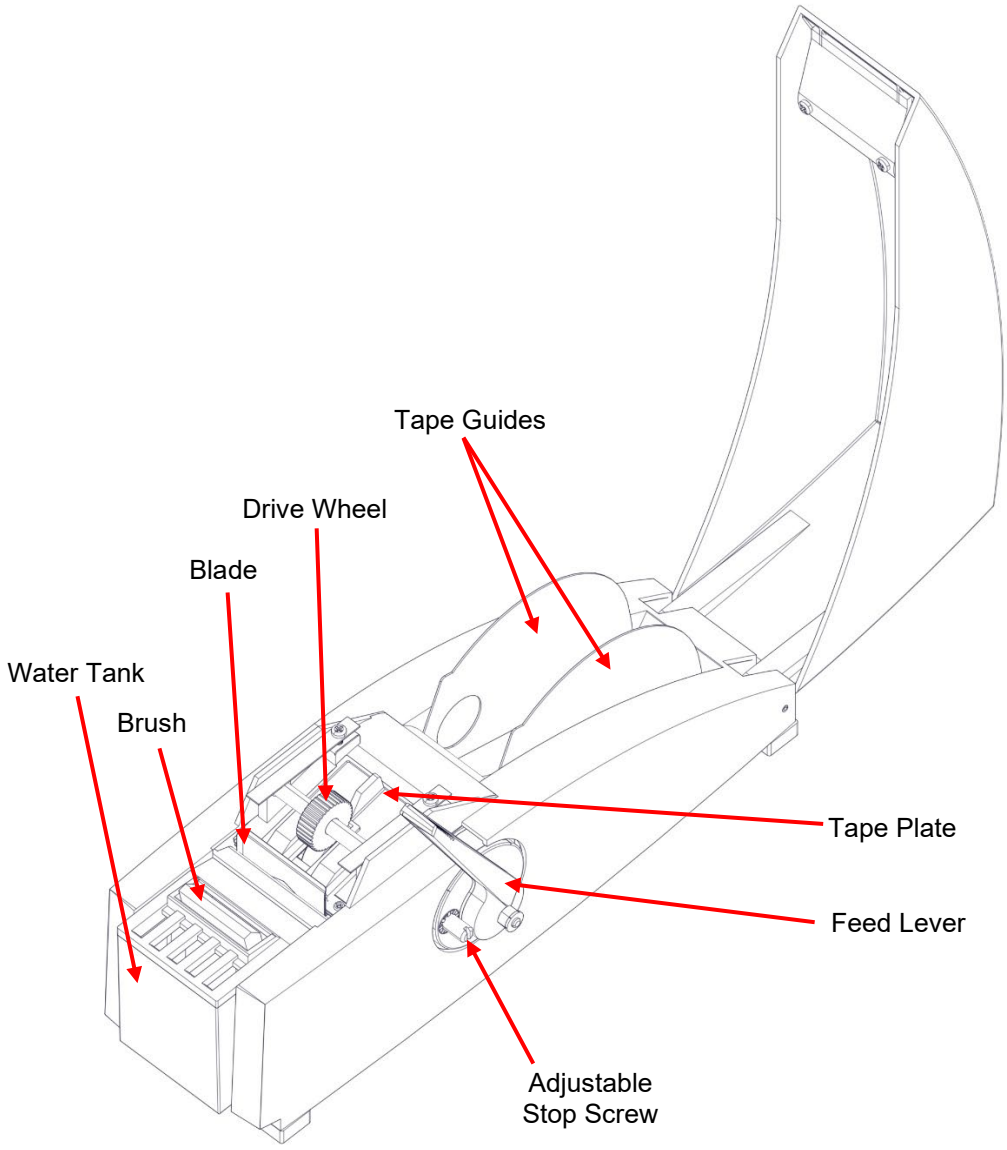

Figure 3 Tapeshooter 404 Components

Specifications

Operating Conditions

Use in a dry, relatively clean environment at 40º to 105º F (5º to 40º C). Humidity not to exceed 90% at a temperature of 68º F (20º C).

Tape Requirements

Use only IPG Brand Plain Kraft Gummed Out Water Activated Tape. The Tapeshooter 404 is designed specially for the 35# non-reinforced kraft tape.

Maximum tape roll diameter of 5 in (127mm) with a maximum tape roll length of up to 500 ft (152.4m)

Technical Specifications

This is a manual dispenser with no power requirements.

Water tank Capacity

Maximum water volume capacity: 7 fl oz (217mL)

Optimal water volume: 5.5 fl oz (160 mL)

No special water is needed. If your water source is hard or contains a larger amount of minerals than average you may want to consider using filtered water.

Unpacking

After opening the top flaps of the carton, you will find instructions for properly removing the dispenser.

Verifying the Contents

Once the dispenser has been removed from the carton verify all the contents.

1. Water tank 012-869-1
2. Brush 012-898-0
3. Tape Guides (2X) 012-883-0
4. Tape Plate 012-871-1

Adjusting the Roll Guide

Two roll guides are included with the Tapeshooter 404. Position these so the long flat length is on the top and the curve follows along the tape basket. The circular hole should be positioned to the rear. The flat sections along the curve fit into the slots in the tape cradle to lock them into position.

To determine the correct positions place a roll of tape in the basket visually centered. Then place the guides positioned in the closest exposed slots.

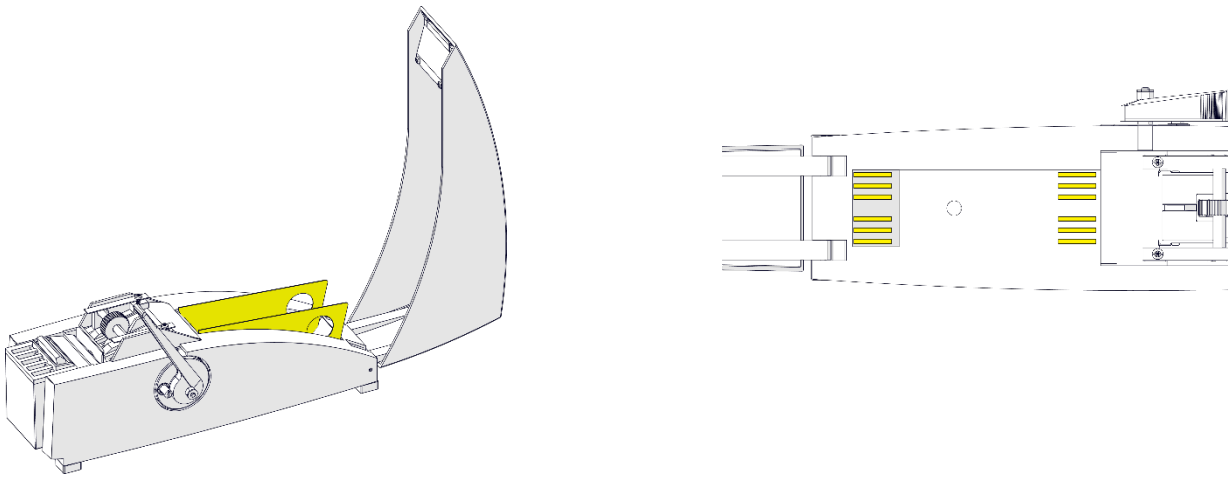

Figure 4 Tape Roll Guides

Loading Tape

Gum Side Out

1. Peel off the tape.
2. Unroll about 5 inches (150mm) of tape.
3. Place tape in tape cradle and be sure tape guides are in proper position to fit width of tape.
   3.1. Be sure the tape when peeled off would come over the bottom of the tape roll toward the front of the dispenser.
4. Feed the tape under the tape plate and up to the feed wheel.
5. Slowly pull the feed lever down to advance the tape (gently pushing the tape forward until it gets taken by the wheels.

CAUTION: BLADE IS SHARP. USE CUT RESISTANT GLOVES WHEN HANDLING THE BLADE.

6. If the tape has not been pushed past the blade you can release the lever.
7. If the tape has been pushed past the blade, make sure at least 1 inch (25mm) of tape has been dispensed.

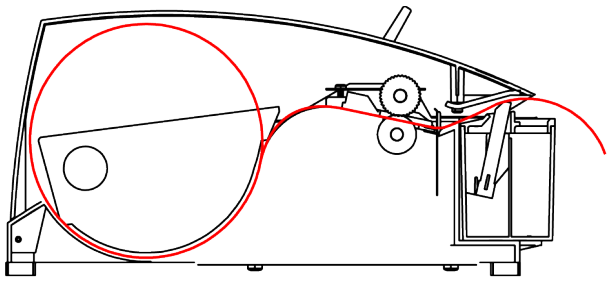

Figure 5 Gum side out tape path

Installing the Brush and Filling the Tank With Water

Removing and Installing the Brush

1. Lift the lid of the dispenser
2. Remove the chrome plated cover on the water tank.
3. Lift the brush straight out.

Filling the Tank with Water

The tank can accommodate a maximum of 7 fl oz (217mL) of water. No special water is needed. If your water source is hard or contains a larger amount of minerals than average you may want to consider using filtered water.

1. Lift the lid of the dispenser.
2. Lift the water tank straight up out of the dispenser.
3. Remove the chrome plated lid.
4. Fill the tank roughly 2/3 with water. This is the optimal water level 5.5 fl oz (160 mL) and will allow the Tapeshooter 404 to wet out the tape while not being too full to splash out.

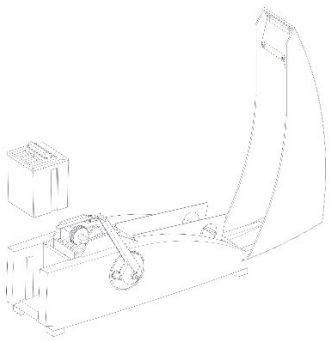

Figure 6 Brush Installation & Water Filling

Operation

The Tapeshooter 404 is manual tape dispenser and requires the operator to press down on the side lever to drive tape from the dispenser.

Change the Length of the Dispense

1. Use a flat head screwdriver and rotate to the left to loosen the lever stop pin.
2. Rotate the entire dial around the lever. The approximate length, in inches, will be displayed in the window.
3. Once you have the desired length, tighten down the pin by rotating it to the right, locking the lever stop pin.

Dispensing a Length of Tape

1. With the lever stop in the desired position and tape loaded, push the lever all the way to the lever stop pin.
   1.1. When pushing the lever the first initial press will raise the blade out of the way.
   1.2. When you feel additional resistance you will also hear the drive roller begin to move tape.
2. If additional length is needed you can lift the lever and press back down to reengage the drive (use caution if this is the case as lifting the lever too far will drop the blade and cut the tape).
3. Lift the lever back to its home position to cut the tape.
   3.1. You can also let go of the lever and it will return under spring power to cut the tape.

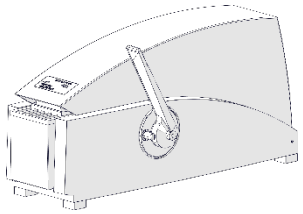

Figure 7 Lever in home position

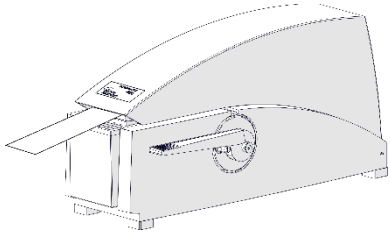

Figure 8 Tape dispensed

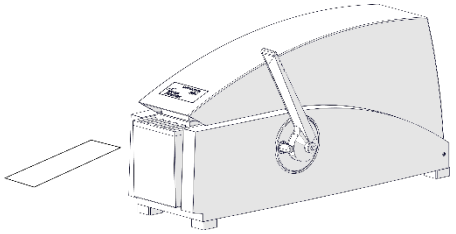

Figure 9 Cut Length

Choosing the Correct Tape Type

The Tapeshooter 404 is designed specifically for 1-1 ½ inch (25.4-38.1mm) wide non-reinforced, gum side out, paper kraft tape. If you are looking to use other forms of tape please contact IPG Machinery Support.

TYPE	**CHARACTERISTIC**
Paper Tape or Kraft Paper Tape	Made from paper only, with no additional reinforcing material
Reinforced Tape or Reinforced Paper Tape	Made from paper and contains additional strands of reinforcing material, typically fiberglass

IPG offers a variety of different grades of Paper Tape or Kraft Paper Tape. In most circumstances this non-reinforced tape is good for smaller and lighter cartons.

IPG offers a variety of different grades of Reinforced Tape or Reinforced Paper Tape. In most circumstances this reinforced tape is good for larger boxes and those with increased weight.

Contact your Authorized IPG Representative for the best tape for your applications.

Choosing the Correct Tape Length

In most situations the Tapeshooter 404 is used in environments where sealing of non-RSC style cartons is frequent. This includes but is not limited to: Auto-Bottom, Biers (Pizza Box), RTE, STE, TTSLB, etc. For these carton a length of 2 to 8 inches (51-203mm) is appropriate placed, centered, length wise along a carton seam.

Proper Tape Moistening

Dispense a piece of tape and examine the adhesive surface. The tape should:

- Be evenly wet
- Have no dry spots
- Have no spots where water is running off the surface.

Rub the wet adhesive with your finger.

- The adhesive should have an “oily” feel and consistency.
- You should be able to move the adhesive underneath your finger.

When you rub two wet adhesive surfaces of the tape together against each other, you should see “strings” of adhesive stretching between the two surfaces as you pull them apart, looking much like taffy as it is pulled.

If the tape is too wet or watery, it:

- Will not set fast enough
- May slip slightly over the surface of the carton, causing a “loose” seal

If the tape is not wet enough, it:

- May be tacky or sticky like pressure sensitive tape, but not “oily” like properly moistened tape.
- Is too dry to properly activate the adhesive which will prevent a permanent bond from forming (because the adhesive cannot penetrate the corrugate fibers).
- May too easily pull off the carton during handling and transportation.

Preventative Maintenance

Suggested Preventative Maintenance Schedule

Weekly

- Wash brushes with mild soap and water. Rinse well to remove all soap residue.
- Clean any accumulated dust with a dry brush or blower.
- Wash water tank with mild soap and water. Rinse well to remove all soap residue.

Monthly

- Clean accumulated glue from blades using a scraper. Do not scrape the cutting edge of the blade this can cause damage and may result in needing to change the blade.
- Apply a light coating of a light machine oil to the back of the blade.
- Add only a few drop of a light machine oil to felt pads.

Annually

- Thoroughly clean all accumulated pieces of tape, dust, and any other foreign material from inside the Dispenser with a dry brush or blower.
- Clean the bottom of heaters and pressure plates of accumulated tape adhesive.
- Clean all covers with a damp rag.

Washing the Tank and Brush

Water Brush: Glue from the tape may accumulate and reduce the effectiveness of the moistening system. Wash brushes weekly with mild soap. Be sure to agitate the bristles while in the soap and water solution. A brush is considered clean after this agitation and all adhesive build up has been removed.

It is recommended to soak brushes in a solution of mild soap and water overnight. This will reduce any adhesive build up and extend the life of the brushes.

If you operate multiple machines all brushes may soak in the same container.

Rinse the brushes in running warm water before reinstalling them into a clean water tank.

Water Tank: Glue from the tape may accumulate in the water tank. This build up can accumulate in the water brushes and result in a reduction of water transmission to the tape and a weaker bond to the carton.

It is recommended to wash the water tank once a week in a warm soap and water solution. Use a low-scratch abrasive brush to clean the bottom of the water tank as well as the tight areas. Rinse the water tank in running warm water before reinstalling.

Support Contact

If you are experiencing trouble with your Dispenser or it is functioning in a way that is not consistent with this manual please contact IPG Machinery Support at +1 813-345-3070 between the hours of 8am and 7pm Eastern Standard Time or via email at machsupp@itape.com

Decommissioning/Disposal

When the dispenser reaches the end of its service life or is being permanently removed from service:

1. Remove the roll of water-activated tape and any remaining tape from the tape path.
2. Remove and empty the water tank.
3. Clean and dry the water tank, brushes, and other areas containing water or adhesive residue.
4. Remove any accessories or externally connected devices.
5. Dispose of or recycle the dispenser and its components in accordance with applicable local regulations.

Separate metal, plastic, and other materials as required by applicable local regulations. Contact the appropriate local recycling or waste-management authority for disposal requirements.

Parts Diagram

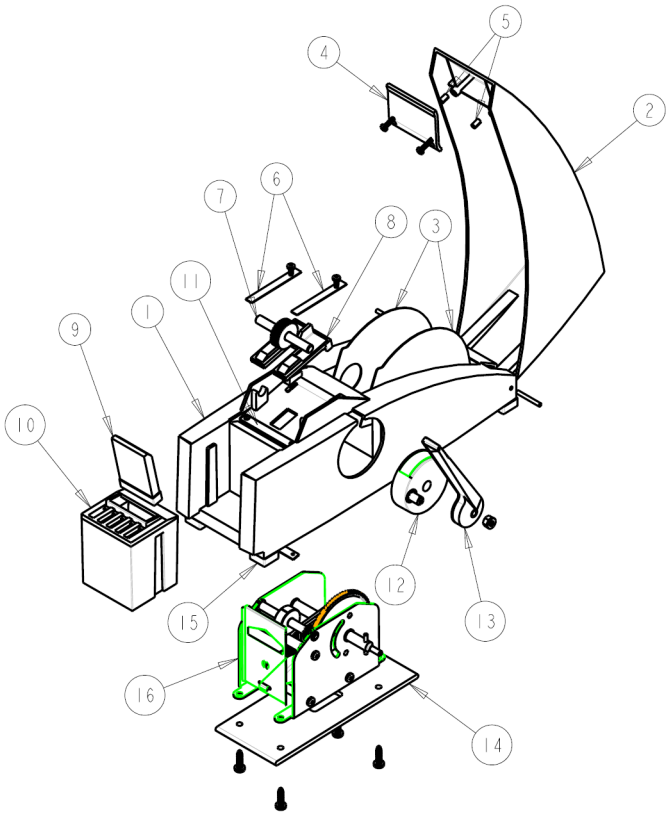

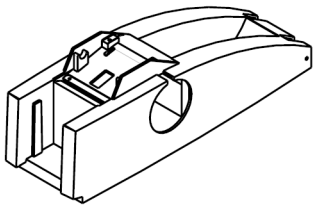

ITEM 1
012-865-0 - BASE

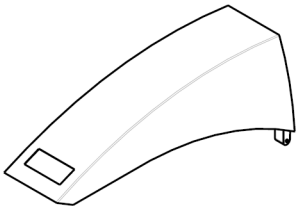

ITEM 2
012-867-0 - COVER



ITEM 3
012-883-0 - ROLL GUIDE



ITEM 4
012-879-0
PRESSURE PLATE



ITEM 5
023-777-0
SPACER, .144/.155 ID x 5/16 LG



ITEM 6
012-884-0
TENSION SPRING

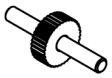

ITEM 7
012-877-1
ASSY, UPPER FEED WHEEL SHAFT

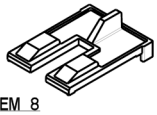

ITEM 8
012-871-0
TAPE WEIGHT

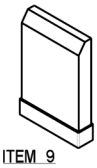

ITEM 9
012-898-0
BRUSH

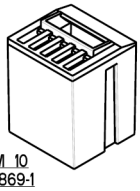

ITEM 10
012-869-1
ASSY, TANK

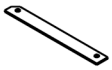

ITEM 11
012-885-0
CUTTER PLATE



ITEM 12
012-858-1
ASSY, MEASURING DIAL



ITEM 13
012-958-0
OPERATING LEVER

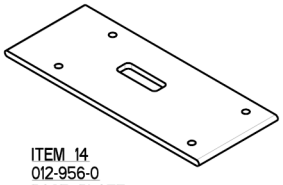

ITEM 14
012-956-0
BASE PLATE



ITEM 15
012-881-0
FOOT

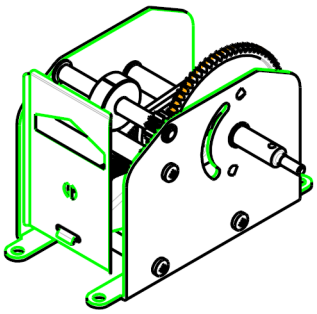

ITEM 16
012-857-2
ASSY, MECHANISM DRIVE

